Bedienungsanleitung (Original-Bedienungsanleitung)
Temperaturmessumformer Serie ETS 4000
mit HART Schnittstelle
mit Explosion Proof / Flame Proof-Zulassung

Operating instructions (Translation of the original instructions)
Temperature Transmitter Series ETS 4000
with HART Interface
Explosion Proof / Flame Proof approval

CSA Explosion Proof (seal not required)	**Certificate No.:**	CSA MC 224264
ATEX Flame Proof	**Certificate No.:**	KEMA 10ATEX0100 X
IECEx Flame Proof	**Certificate No.:**	IECEx KEM 10.0053X

Certification / El. Connection	1/2 -14 NPT Conduit or M20x1,5 Conduit Single leads	1/2 -14 NPT Conduit or M20x1,5 Conduit Jacketed cable
$_{C}CSA_{US}$	Class I Groups A, B, C, D, T6, T5 Class I Zone 1 AEx db IIC T6, T5 Gb [US] Ex db IIC T6, T5 Gb [C] Class II Groups E, F, G T110°C, T120°C Zone 21 AEx tb IIIC T110°C, T120°C Db [US] Ex tb IIIC T110°C, T120°C Db [C] Class III Type 4	Class I Groups A, B, C, D, T6, T5 Class I Zone 1 AEx db IIC T6, T5 Gb [US] Ex db IIC T6, T5 Gb [C] Class II Groups E, F, G T110°C Zone 21 AEx tb IIIC T110°C Db [US] Ex tb IIIC T110°C Db [C] Class III Type 4
ATEX	I M2 Ex db I Mb II 2G Ex db IIC T6, T5 Gb II 2D Ex tb IIIC T110°C, T120°C Db	I M2 Ex db I Mb II 2G Ex db IIC T6, T5 Gb II 2D Ex tb IIIC T110°C Db
IECEx	Ex db I Mb Ex db IIC T6, T5 Gb Ex tb IIIC T110°C, T120°C Db	Ex db I Mb Ex db IIC T6, T5 Gb Ex tb IIIC T110°C Db

Certification / El. Connection	Connection head Aluminum	Connection head Stainless steel
$_{C}CSA_{US}$	Class I Groups A, B, C, D, T6, T5 Class I Zone 1 AEx db IIC T6, T5 Gb [US] Ex db IIC T6, T5 Gb [C] Class II Groups E, F, G T110°C, T120°C Class III Type 4	Class I Groups B, C, D, T6, T5 Class II Groups E, F, G T110°C, T120°C Class III Type 4
ATEX	II 2G Ex db IIC T6, T5 Gb II 2D Ex tb IIIC T110°C, T120°C Db	II 2G Ex db IIC T6, T5 Gb II 2D Ex tb IIIC T110°C, T120°C Db
IECEx	Ex db IIC T6, T5 Gb Ex tb IIIC T110°C, T120°C Db	Ex db IIC T6, T5 Gb Ex tb IIIC T110°C, T120°C Db

Inhaltsverzeichnis / Table of Contents

Deutsch

Anhang

English

Appendix

1. Allgemeine Bemerkungen

Falls Sie Fragen bezüglich der technischen Daten oder Eignung für Ihre Anwendungen haben, wenden Sie sich bitte an unseren **technischen Vertrieb**.
Die Temperaturmessumformer der Serie ETS 4000 HART werden einzeln auf rechnergesteuerten Prüfständen abgeglichen und einem Endtest unterzogen. Sie sind wartungsfrei und sollten beim Einsatz innerhalb der Spezifikationen (siehe technische Daten) einwandfrei arbeiten. Sollten trotzdem Fehler auftreten wenden Sie sich bitte an den **HYDAC-Kundendienst**.
Nicht vorschriftgemäße Montage oder Fremdeingriffe in das Gerät führen zum Erlöschen jeglicher Gewährleistungsansprüche sowie der ATEX, IECEx und CSA Zulassung.

2. Funktionsweise

Das vom Sensor gemessene Temperatursignal wird in ein der Temperatur proportionales, analoges 4 .. 20 mA Signal umgewandelt. Neben der analogen Ausgabe des Messwertes ist eine digitale Kommunikation mit Hilfe des HART Protokolls möglich.

3. Installation und Inbetriebnahme

Die Temperaturmessumformer können über den Gewindeanschluss direkt an der Hydraulikanlage montiert werden. Der Temperatursensor ist in dem vor dem Gewinde befindlichen Zapfen integriert. Um eine korrekte Temperaturmessung durchzuführen, muss sichergestellt werden, dass sich dieser Zapfen im Volumenstrom des Fluides befindet.
Anzugsdrehmoment: siehe Abmessungen

Wenn die Temperaturmessumformer gemäß der Nordamerikanischen Zulassungen eingesetzt werden, ist die Benutzung eines Conduit Systems am 1/2-14 NPT oder M20x1,5 Gewinde des elektrischen Anschlusses zwingende Voraussetzung, auch im Zonen-System.

Die Installation muss von einem Fachmann nach den jeweiligen Landesvorschriften zu potenziell explosiven Umgebungen durchgeführt werden, z.B.: IEC / EN 60079-14.

Die Temperaturmessumformer der Serie ETS 4000 HART tragen das CE - und UKCA - Zeichen. Die Konformitätserklärung befindet sich im Anhang.

Die Forderungen der Normen (siehe technische Daten) werden nur bei ordnungsgemäßer und fachmännischer Erdung des Temperaturmessumformer-Gehäuses mittels des Prozessanschlusses, dem ½ -14 NPT oder M20x1,5 Conduit oder der Erdungsklemme (außen an einem Anschlusskopfs), erreicht. Sofern eine grün/gelbe Ader vorhanden ist, darf diese zusätzlich, aber nicht zur alleinigen Erdung verwendet werden. Wenn der Hydraulikanschluss über einen Schlauch erfolgt, ist das Gehäuse separat zu erden.

Die Geräte müssen während der Installation geerdet sein.
Die Eignung der Erdung unterliegt der Abnahme der lokal zuständigen Prüfbehörden.

Allgemeine Sicherheitshinweise (vgl. Abschnitt 5) sind in jedem Fall zu beachten.
Einbau gemäß Kontrollzeichnungen Nr. 663929 (siehe Anhang A1).

<u>Für Temperaturmessumformer mit Option Druckmessung</u>
Geräte mit einem Nenndruck < 40 bar bieten einen Druckausgleich zum Umgebungsdruck (belüftet zur Atmosphäre, siehe Typenschlüssel). Dieser wird durch eine flammsichere Bohrung ermöglicht, welche sich am elektrischen Anschluss befindet.

4. Wichtige Hinweise für die Conduit-Installation

Mechanische Installation

Für die Montage des Prozessanschlusses darf nur die Schlüsselfläche an der Prozessanschlussseite des Temperaturmessumformers verwendet werden.

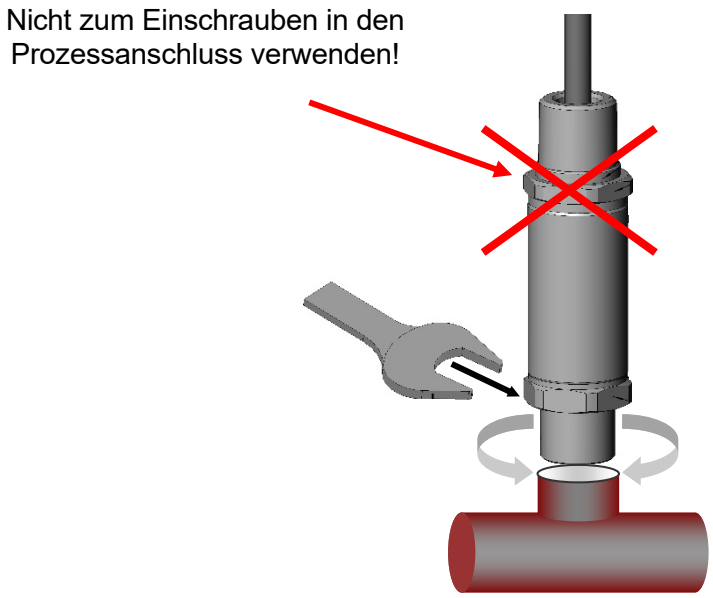

Elektrische Installation

Die Schlüsselfläche an der Seite des elektrischen Anschlusses dient nur zum Fixieren des Gerätes bei der Conduit-Installation.

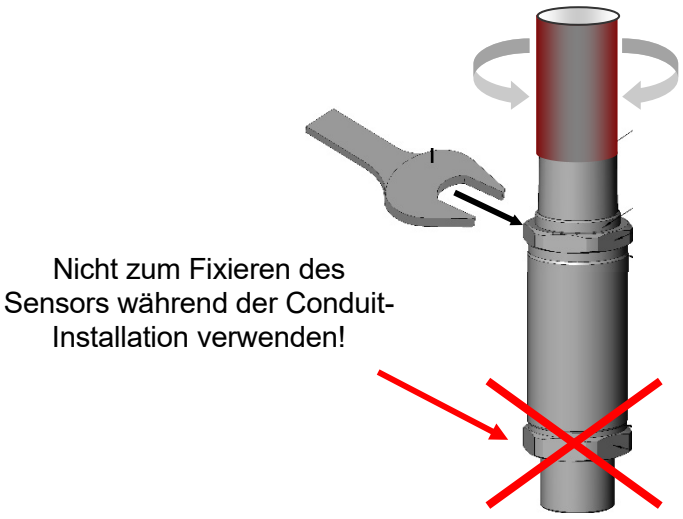

5. Allgemeine Sicherheitshinweise

Wenn das Etikett nicht mehr lesbar ist, muss der Temperaturmessumformer außer Betrieb genommen werden.

Die Dichtungen sind in regelmäßigen Abständen, in Abhängigkeit der klimatischen Bedingungen und dem Medieneinfluss, auf ihre Funktionstüchtigkeit zu kontrollieren, und wenn erforderlich auszutauschen. Ersatzdichtungen und -flachdichtungen können von der HYDAC ELECTRONIC GMBH bezogen werden. (Standarddichtungen: siehe technische Daten).
Diese Überprüfung muss mindestens alle drei Jahre durchgeführt werden.

Wenn das Gerät oder Anschlusskabel beschädigt ist, müssen diese Bauteile ersetzt werden.

Es ist unbedingt auf die Verträglichkeit der Messmedien mit den verwendeten Werkstoffen des Temperaturmessumformers zu achten. Die Druckfestigkeit unbedingt einzuhalten. Angaben hierzu siehe "Technische Daten". Die Druckfestigkeit ist auch auf dem Typenschild als **MWP** = **M**aximum **W**orking **P**ressure angegeben. Ebenso sind die im Zertifikat angegebenen "Sicherheitstechnischen Daten" einzuhalten. Die Daten hinsichtlich der Nutzung in explosionsgefährdeten Umgebungen sind in jedem Fall zu berücksichtigen.

Der Temperaturmessumformer ist so zu installieren und zu verwenden, dass elektrostatische Aufladungen durch Betrieb, Wartung und Reinigung ausgeschlossen werden. Für den Einsatz in staubexplosionsgefährdeten Bereichen müssen prozessbedingte elektrostatische Aufladungen, z.B. durch vorbeiströmende Medien, ausgeschlossen werden.“

Die Geräte müssen während der Installation geerdet sein. Die Eignung der Erdung unterliegt der Abnahme der lokal zuständigen Prüfbehörden. Versorgungsspannung: ”Limited Energy” - gemäß CAN/UL 61010 (Clause 9.4), Class 2 UL1310, LPS (CAN/UL 60950).

<u>Temperaturmessumformer mit Option Druckmessung</u>
Die interne Messmembrane des Gerätes ist gegen mechanische Beschädigung zu schützen. Die Überlast- und Berstdrücke sind unbedingt einzuhalten. (Angaben hierzu siehe "Technische Daten").

<u>Hinweis zur Verwendung des elektrischen Anschlusses allgemein (außer Anschlusskopf Aluminium mit Typenschlüssel-Code J):</u>

- Für Class I, II und III: Seal not required.

<u>Hinweis zur Verwendung für elektrische Anschlüsse mit integriertem Kabel mit Typenschlüssel-Code 9, G, U und W:</u>

- Die Installation muss von einem Fachmann nach den jeweiligen Landesvorschriften zu potenziell explosiven Umgebungen durchgeführt werden (z.B.: IEC / EN 60079-14).
- Fester Einbau ist notwendig.

<u>Hinweis zur Verwendung des elektrischen Anschlusses bei Einsatz z. B. eines Anschlusskopfes oder eines Klemmenkastens.</u>
Generell ist immer die "Schedule of Limitations" (Liste der Einschränkungen) beim Anschluss der Druckmessumformer an einen Klemmkasten oder einen Anschlusskopf zu berücksichtigen.

Die Zertifikate für die Geräte mit Anschlusskopf, welcher von HYDAC Electronic montiert wird (im Typenschlüsssel Code J und Q), werden als Beilagedokument mitgeliefert.

Auszug aus den Zertifikaten der Hersteller Limatherm und Pushna als Beispiele für "Schedule of Limitations" (Liste der Einschränkungen).

- Aluminium Anschlusskopf (Code J im Typenschlüssel), Hersteller Limatherm, Serie XD-AD:
  - Auszug aus dem CSA Zertifikat:
    “For Class I Group A and for Class I Zone 1 installation a conduit seal is required within 18 inches of enclosure”
    (“Für Class I Group A und für Class I Zone 1 Einbau ist ein Conduit Seal (Zündsperre) innerhalb eines Abstands von 18" vom Gehäuse gemessen anzubringen”)
  - Auszug aus dem ATEX / IECEx Zertifikat:
    “No. 2 from Schedule of limitations: For Information on the dimensions of the flameproof joints the manufacturer shall be contacted”.
    ("Nr. 2 aus der Schedule of Limitations: Für Informationen über die Abmessungen der explosionssicheren Verbindungen ist der Hersteller zu kontaktieren.")

- Edelstahl Anschlusskopf (Code Q im Typenschlüssel), Hersteller Pushna, Serie 1016 PSEM
  - Auszug aus dem CSA Zertifikat:
    “Open circuit before removing cover”
    "Den Deckel nur im ausgeschalteten Zustand (unterbrochener Stromkreis) entfernen."
  - Auszug aus dem ATEX / IECEx Zertifikat:
    “No. 8 from Schedule of limitations: Consult the manufacturer if dimensional information on the flameproof joints is necessary”
    ("Nr. 8 aus der Schedule of Limitations: Bitte konsultieren Sie den Hersteller, sofern Informationen über die Abmessungen der explosionssicheren Verbindungen benötigt werden.")

<u>Wichtiger Hinweis für den Einsatz in Bergwerksanwendungen:</u>

Die chemische Beständigkeit der Druckmessumformer mit elektrischem Anschluss mittels Conduit mit Einzeladern oder freiem Kabelende ist nicht für den Einsatz in Bergwerksapplikationen gemäß ATEX und IECEx Gerätegruppe I getestet.
Für den Einsatz in Bergwerksapplikationen muss ein Conduit-Schlauch oder -Rohr am elektrischen ½-14 NPT oder M20x1,5 Anschluss installiert werden und das Kabel oder die Adern müssen so weit durch den Conduit bzw. das Rohr geführt werden bis ein Bereich erreicht wird, der außerhalb der chemischen Kontaminierung liegt.

6. Technische Daten

6.1 ETS 4000 Standard ohne Option Druckmessung

Eingangskenngrößen	ETS 4100	ETS 4500
Messbereich	-25 .. +100 °C [-13 .. +212 °F]	
Fühlerlänge	10,4 (SAE6); 10,7 (G1/4); 100; 250; 350, 437 mm	
Druckfestigkeit	600 bar [8700 psi] Fühlerlänge 10,4/ 10,7 mm [0,409/ 0,421 Inch] 125 bar [1800 psi] Fühlerlänge 100 mm [3,937 Inch] 125 bar [1800 psi] Fühlerlänge 250 mm [9,843 Inch] 125 bar [1800 psi] Fühlerlänge 350 mm [13,779 Inch] 125 bar [1800 psi] Fühlerlänge 437 mm [17.205 Inch]	
Mechanischer Anschluss (Anzugsdrehmoment, empfohlen)	G1/4 A ISO 1179-2, außen (20 Nm) 9/16-18 UNF 2A (SAE6, außen (20 Nm) 1/4-18 NPT, (außen) (40 Nm)	
Medienberührende Teile	1.4571(316Ti); 1.4301 (304) Dichtung: FKM (SAE6 und G1/4)	
Conduit- / Gehäusewerkstoff	1.4435 (316LMHO); 1.4404 (316L)	
Ausgangsgrößen		
Ausgangssignal	4 .. 20 mA mit HART Protokoll RLmax = (UB – 12 V) / 20 mA [kΩ] für HART Kommunikation min. 250Ω	
HART Kommunikation	gemäß HART 7 Spezifikation	
HART Common Practice Commands z.B.	Änderung der Messbereichsgrenzen (siehe Tabelle)	
Genauigkeit (bei Raumtemperatur)	≤ ± 0,4 % FS typ. ≤ ± 0,8 % FS max.	≤ ± 1,0 % FS typ. ≤ ± 2,0 % FS max.
Temperaturdrift	≤ ± 0,01 % FS/°C [0,006 % FS/°F]	≤ ± 0,02% FS /°C [0,01 % FS /°F]
Anstiegszeit nach DIN EN 60751	t_{50}: ~ 10 s t_{90}: ~ 15 s	
Umgebungsbedingungen		
Betriebs- /Umgebungstemperaturbereich [1)2)]	T6, T110°C: -40 .. +60°C / -20 .. +60 °C [-40 .. +140 °F/ -4 .. +140 °F] T5, T120°C: -40 .. +70°C / -20 .. +70 °C (-40 .. +158 °F/ -4 .. +158 °F]	
Mediumstemperaturbereich [1)2)]	T6, T110°C: -40 .. +60°C / -20 .. +60 °C [-40 .. +140 °F/ -4 .. +140 °F] T5, T120°C: -40 .. +70°C / -20 .. +70 °C (-40 .. +158 °F/ -4 .. +158 °F]	
Lagertemperaturbereich	-40 .. +100 °C [-40 .. +212 °F]	
CE - Zeichen , UKCA - Zeichen	EN 61000-6-1 / 2 / 3 / 4 EN 60079-0/ 1/ 31	
Vibrationsbeständigkeit nach IEC 60068-2-6 bei 10 ..500 Hz	≤ 10 g ≤ 5 g mit Anschlusskopf	
Schutzart nach IEC 60529 [3)] ISO 20653	IP 68 (Version mit Anschlusskopf), IP 69 IP 6K9K	
Sonstige Größen		
Versorgungsspannung [4)]	12 .. 30 V DC	
Restwelligkeit Versorgungsspannung	gemäß FSK Physical Layer Specification (HCF_SPEC-054)	
Stromaufnahme	≤ 25 mA	
Gewicht (ohne Anschlusskopf)	ca. 280 g Fühlerlänge 10,4/ 10,7 mm [0,409/ 0,421 Inch] ca. 315 g Fühlerlänge 100 mm [3,937 Inch] ca. 350 g Fühlerlänge 250 mm [9,843 Inch] ca. 385 g Fühlerlänge 350 mm [13,779 Inch] ca. 420 g Fühlerlänge 17.205 inch [437 mm]	

Anm.: Verpolungsschutz der Versorgungsspannung, Überspannung-Übersteuerungsschutz, Lastkurzschlussfestigkeit vorhanden.
FS (Full Scale) = bezogen auf den vollen Messbereich
B.F.S.L. = Best **F**it **S**traight **L**ine

1) -4 °F [-20 °C] mit FPM Dichtung, Dichtungsmaterial bis -40 °F[-40°C] auf Anfrage
2) T130°C bei Ta= -40 .. 70°C/ -20 .. 70°C nur mit eletrischem Anschluss Einzelader möglich
3) Bei Verwendung einer IP 68 Kabelverschraubung. Das ½-14 NPT Gewinde der Kabelverschraubung muss mittels Gewindedichtungsmasse abgedichtet werden.
4) “Limited Energy” - gemäß CAN/UL 61010 (Clause 9.4), Class 2 UL1310, LPS (CAN/UL 60950).

6.2 ETS 4000 mit Option Druckmessung

Allgemeingültige techn. Daten: Siehe 6.1 ETS 4100 / ETS 4500 Standard

Zusätzliche technische Daten mit Option Druckmessung:

Eingangsgrößen		**ETS 4100**				**ETS 4500**		
Messbereich	bar	16	40	60	100	250	400	600
Überlastbereich	bar	32	80	120	200	500	800	1000
Berstdruck	bar	100	200	300	500	1000	2000	2000
Messbereich	psi	300	500	1000	3000	5000	6000	9000
Überlastbereich	psi	725	1160	2900	7250	11600	11600	14500
Berstdruck	psi	1800	2900	7250	14500	29000	29000	29000
Mechanischer Anschluss		G 1/2 A ISO 1179-2 (DIN 3852) mit Messzapfen						
Anzugsdrehmoment, empfohlen		45 Nm						
Medienberührende Teile		Edelstahl: 1.4542(630); 1.4548(630) Dichtung: FKM						
Fühlerlänge		7 mm						
Ausgangsgrößen								
Ausgangssignal Temperatur		4 .. 20 mA mit HART Protokoll						
Ausgangssignal Druck		Das Drucksignal ist als Sekundärvariable über HART Protokoll als digitales Signal verfügbar.						
Genauigkeit nach DIN16086 Grenzpunkteinstellung	Typ. Max	≤ ± 0,25 % FS ≤ ± 0,5 % FS				≤ ± 0,5 % FS ≤ ± 1,0 % FS		
Genauigkeit bei Kleinstwerteinstellung (B.F.S.L)	Typ. Max	≤ ± 0,15 % FS ≤ ± 0,25 % FS				≤ ± 0,25 % FS ≤ ± 0,5 % FS		
Temperaturkompensation Nullpunkt	Typ. max	≤ ± 0,008 % /°C [0,004% FS /°F] ≤ ± 0,015 % /°C [0,008% FS /°F]				≤ ± 0,015 % /°C [0,008% FS /°F] ≤ ± 0,025 % /°C [0,014% FS /°F]		
Temperaturkompensation Spanne	Typ. max	≤ ± 0,008 % /°C [0,004% FS /°F] ≤ ± 0,015 % /°C [0,008% FS /°F]				≤ ± 0,015 % /°C [0,008% FS /°F] ≤ ± 0,025 % /°C [0,014% FS /°F]		
Nicht-Linearität bei Grenzpunkt-einstellung nach DIN 16086	max	≤ ± 0,3% FS				≤ ± 0,3% FS		
Hysterese	max	≤ ± 0,1 % FS				≤ ± 0,4 % FS		
Wiederholbarkeit		≤ ± 0,05 % FS				≤ ± 0,1 % FS		
Langzeitdrift	Typ.	≤ ± 0,1 % FS / Jahr				≤ ± 0,3 % FS / Jahr		
Umgebungsbedingungen								
Kompensierter Temperaturbereich		-25 .. +85 °C						
Schutzart nach IEC 60529 [1)] ISO 20653		IP 65 (Vented Gauge), IP 68 (Version mit Anschlusskopf, Seald Gauge) IP 69 (Sealed Gauge) IP 6K9K (Sealed Gauge)						
Lebensdauer		>10 Mio. Lastwechsel (0 .. 100 % FS)						

[1)] Bei Verwendung einer IP 68 Kabelverschraubung. Das ¼ NPT Gewinde der Kabelverschraubung muss mittels Gewindedichtugsmasse abgedichtet werden.

6.3 Messbereichsgrenzen:

Mittels HART Common Practice Commands haben Sie die Möglichkeit folgende Messbereichsgrenzen einzustellen:

Messbereichsgrenzen der Primärvariablen, Temperatur:

Untere Messbereichsgrenze		Obere Messbereichsgrenze		Messspanne	
min	max	min	max	min	max
-25°C	75°C	0°C	100°C	25°C	125°C

Für Geräte mit Option Druckmessung ETS 4000-P
Messbereichsgrenzen der Sekundärvariablen, Druck:

Untere Messbereichsgrenze		Obere Messbereichsgrenze		Messspanne	
min	max	min	max	min	max
0 % FS	112,5 % FS	37,5 % FS	150 % FS	37,5 % FS	150 % FS

6.4 Protokolldaten

HART Version: 7
Manufacturer Code: 0x605E
Manufacturer String: HYDAC ELECTRONIC
Device Type Code: 0xE2A8 Variante mit Temperatur als PV
0xE2A9 Variante mit Temperatur als PV und Druck als SV

7. Typenschlüssel zur Identifikation des gelieferten Gerätes

7.1 ETS 4000 ohne Option Druckmessung

ETS 4 X X X – F21– XXX – D – 000 (XXX)

Genauigkeit
1 = 0,4 % typ.
5 = 1 % typ.

Anschlussart mechanisch
4 = G1/4 A ISO 1179-2 (außen)(DIN 3852)
7 = 9/16-18 UNF 2A (SAE6), (außen)
(nur für Fühlerlänge "010“)
8 = 1/4-18 NPT, (außen)
(nur für Fühlerlänge “100”, “250”, “350”, „437“)

Anschlussart elektrisch
9 = 1/2-14 NPT Conduit (außen),Einzelader
G = 1/2-14 NPT Conduit (außen),Freies Kabelende
J = Anschlusskopf (Aluminium)
Q = Anschlusskopf (Edelstahl)
U = M20x1,5 Conduit, freies Kabelende
W = M20x1,5 Conduit, Einzelladern

Ausgangssignal
F21 = 4 .. 20 mA (mit HART Interface)

Fühlerlänge
010 = 10,4 /10,7 mm [0,409/ 0,421 Inch] (nur mit SAE6 oder G1/4)
100 = 100 mm [3,937 Inch] (nur mit G1/4 oder 1/4-18 NPT)
250 = 250 mm [9,843 Inch] (nur mit G1/4 oder 1/4-18 NPT)
350 = 350 mm [13,779 Inch] (nur mit G1/4 oder 1/4-18 NPT)
437 = 437 mm [17.205 Inch] (nur mit 1/4 -18 NPT)

Zulassung
D = CSA Explosion Proof - Seal not required
ATEX - Flame Proof
IECEx - Flame Proof

Modifikationsnummer
000 = Standard

Bei Geräten mit anderer Modifikationsnummer ist das Typenschild bzw. die mitgelieferte technische Änderungsbeschreibung zu beachten.

Kabellänge
Angabe in m oder “ (inch)

7.2 ETS 4000 mit Option Druckmessung

ETS 4 X 2 X – F21 - 007 - P - XXXXX – DX – XXX (XXX)

Genauigkeit
1 = 0.4 % typ.
5 = 1 % typ.

Anschlussart mechanisch
2 = G1/2 A ISO 1179-2

Anschlussart elektrisch
9 = 1/2-14 NPT Conduit (außen), Einzelader
G = 1/2-14 NPT Conduit (außen), Freies Kabelende
J = Anschlusskopf (Aluminium)
Q = Anschlusskopf (Edelstahl)
U = M20x1,5 Conduit, freies Kabelende
W = M20x1,5 Conduit, Einzelladern

Ausgangssignal
F21 = 4 .. 20 mA (mit HART Protokoll)

Fühlerlänge
007 = 7mm

Mit Druckmessung

Messbereich
4 stellig für bar-Version
5 stellig für psi-Version

Zulassung
D = CSA Explosion Proof - Seal not required
ATEX - Flame Proof
IECEx - Flame Proof

Ausführung Messzelle
S = Sealed Gauge (abgedichtet zur Atmosphäre) ≥ 40 bar
V = Vented Gauge (belüftet zur Atmosphäre) < 40 bar

Modifikationsnummer
000 = Standard

Bei Geräten mit anderer Modifikationsnummer ist das Typenschild bzw. Die mitgelieferte technische Änderungsbeschreibung zu beachten.

Kabellänge
Angabe in m oder “ (inch)

8. Seriennummer

In der Seriennummer ist neben der fortlaufenden Seriennummer die Kalenderwoche und das Jahr der Herstellung des Geräts enthalten.

Konfiguration der Seriennummer (SN): xyykzzzzzz

X	Fertigungsjahr	z. B. : 3 → 2023
yy	Kalenderwoche	z. B.: 11→ KW 11
k	Seriennummer-Index	z. B : -, A, B
zzzzzz	fortlaufende Seriennummer	z. B.: 111111

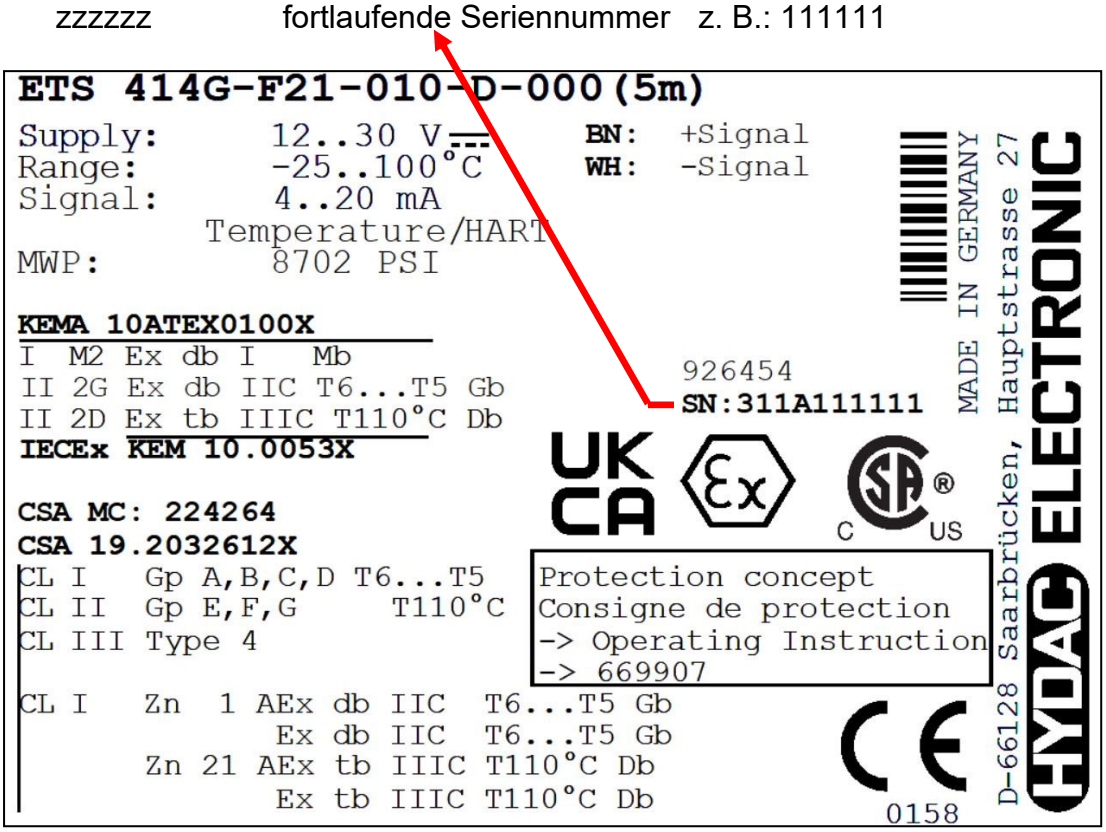

9. Anschlussbelegung

Conduit (Einzelader) / Anschlusskopf

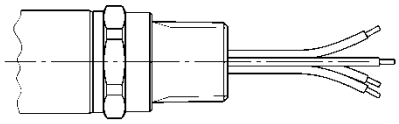

Ader	ETS 45x9-A
rot	Signal +
schwarz	Signal -
grün-gelb	Gehäuse

Conduit (Freies Kabelende)

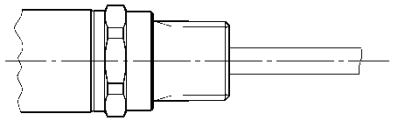

Ader	ETS 45xG-A
weiß	Signal -
braun	Signal +
grün	n.c.
gelb	n.c.

10. Gehäuse-Abmessungen

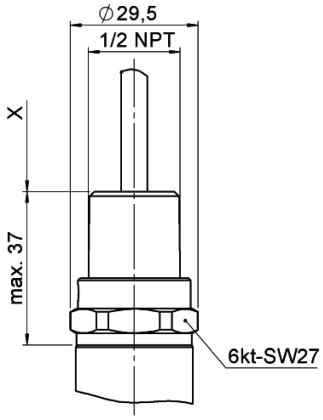

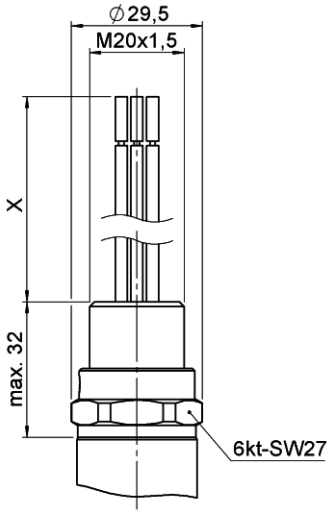

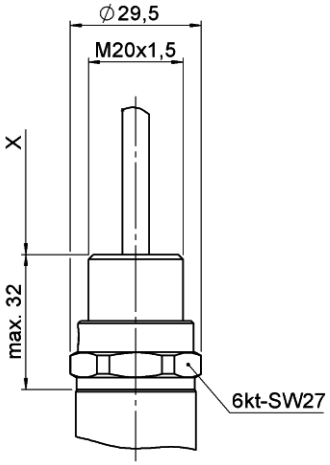

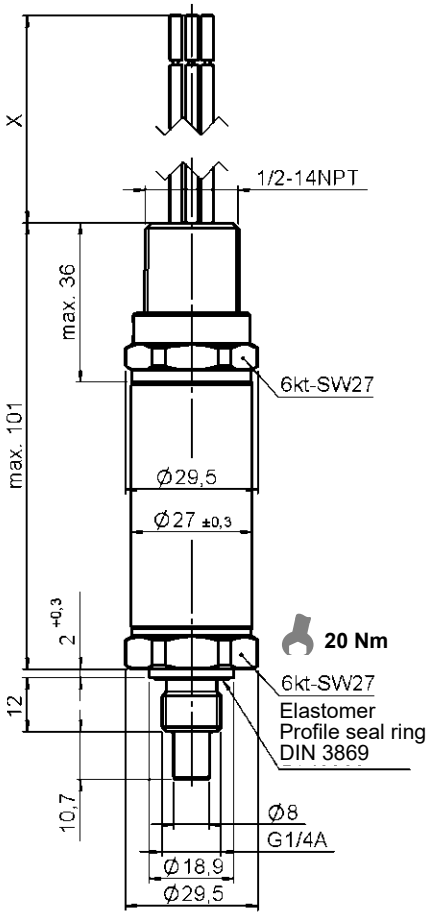

Mechanischer Anschluss mit
Option Druckmessung

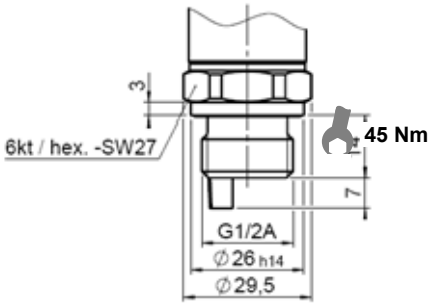

Fühlerlänge (Z)
100 mm (3,937“)
250 mm (9,843“)
350 mm (13,779“)
437 mm (17,205)

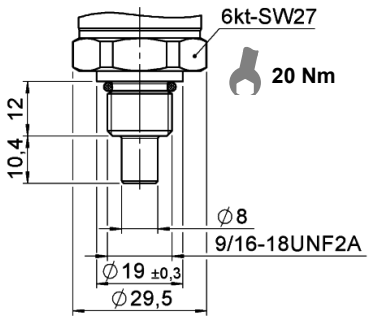

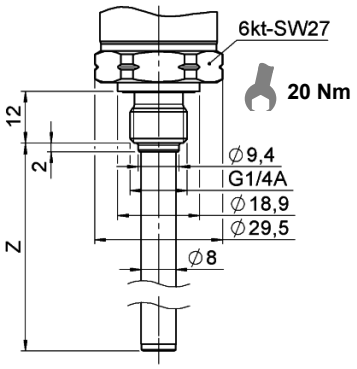

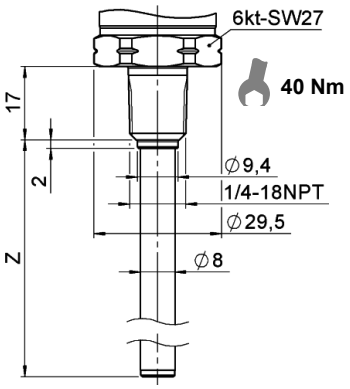

11. Anschlusskopf

Aluminium:

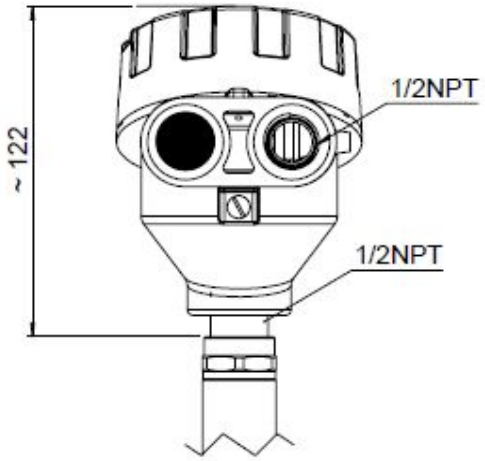

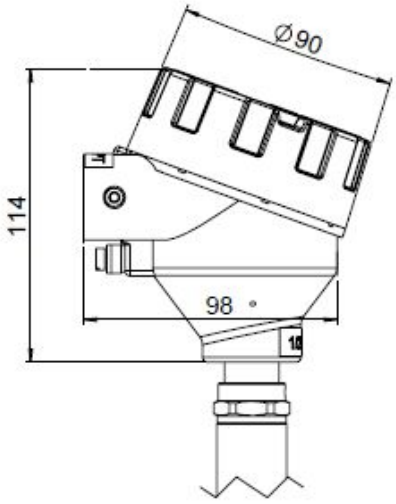

Edelstahl:

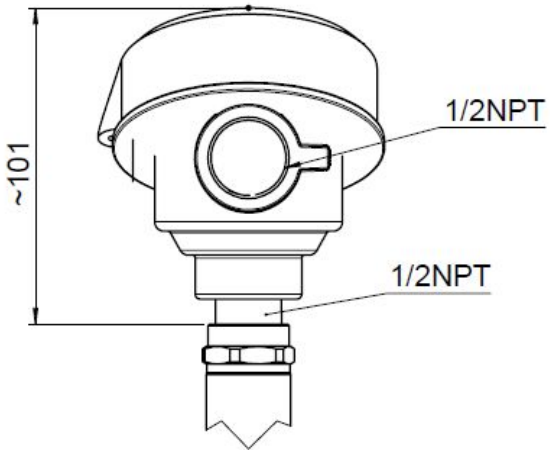

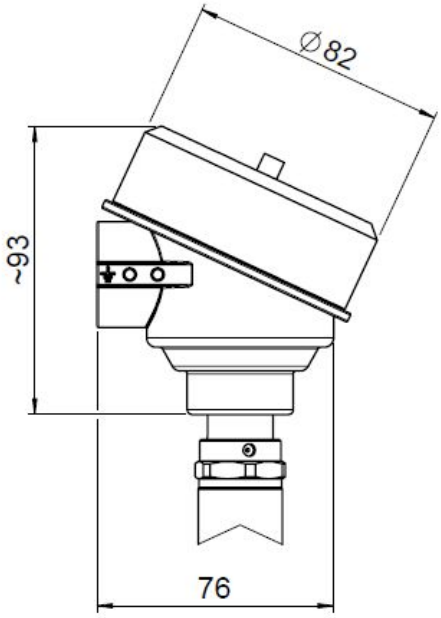

Notizen

HYDAC ELECTRONIC GMBH

Hauptstraße 27

D-66128 Saarbrücken

Deutschland

Web: www.hydac.com

E-Mail: electronic@hydac.com

Tel.: +49 (0)6897 509-01

Fax: +49 (0)6897 509-1726

HYDAC SERVICE

Für Fragen zu Reparaturen
steht Ihnen der HYDAC Service
zur Verfügung.

HYDAC SERVICE GMBH

Hauptstr. 27

D-66128 Saarbrücken

Deutschland

Tel.: +49 (0)6897 509-1936

Fax.: +49 (0)6897 509-1933

Achtung!

Die Angaben in diesem Handbuch beziehen sich auf die beschriebenen Betriebsbedingungen und Einsatzfälle. Bei abweichenden Einsatzfällen und/oder Betriebsbedingungen wenden Sie sich bitte an die entsprechende Fachabteilung.

Bei technischen Fragen, Hinweisen oder Störungen nehmen Sie bitte Kontakt mit Ihrer HYDAC-Vertretung auf.

1. General Remarks

If you have any questions concerning to the technical specifications or suitability for particular applications, please contact **Product Management Dept**. The series ETS 4000 HART temperature transmitters are factory-calibrated and subjected to final testing on test stands employing proprietary software. They are maintenance-free and operate perfectly when used according to the data (see Technical Specifications). However, if there is a cause for complaint, please contact **HYDAC Service.**
Incorrect use or interference by anyone other than HYDAC personnel will cause all warranty claims and ATEX, IECEx und CSA approvals to become null and void.

2. Function

The temperature signal measured by the sensor is converted into an analog 4 .. 20 mA Signal, proporttional to the temperature. In addition to the analog output of the measured value, digital communication is possible by means of the HART protocol.

3. Installation and Commissioning

The temperature transmitters can be installed directly to the hydraulic system via the thread connection. The temperature sensor is built into the stem before the thread. To obtain an accurate temperature reading this stem must be immersed in the flow of the fluid.
Tightening torque see dimensions.

When the transmitters are used according to North American approvals, the use of a conduit system at the ½-14 NPT or M20x1,5 thread at the electrical connection is mandatory, also in the zone system.

The installation is to be carried out by a properly qualified specialist in accordance with the pertinent regulations pertaining to potentially explosive environments (e.g. IEC / EN 60079-14).
The temperature transmitter of the series ETS 4000 HART carry the CE - and UKCA - mark. The certificate of conformity is to be found in the annex.

The requirements of the standards (see technical data) cannot be satisfied unless the temperature transmitter housing is properly grounded via the mechanical connection, the ½-14 NPT or M20x1.5 conduit or the ground terminal which is located at the outside of the connection head. If a green-yellow wire is available, it can be used additionally for grounding, but may not be used on its own as the grounding connection.

The devices must be grounded during installation. The suitability of the grounding shall be subject to the acceptance of the local inspection authority having jurisdiction.

The General Safety Precautions (cf. section 5) are to be heeded in any event.

Installation per Control Drawings No. 663929 (see appendix A1).

<u>For temperature transmitters with optional pressure measurement</u>
Devices having a nominal pressure of < 40 bar provide a pressure equalisation to ambient pressure (Vented Gauge, see model code). This is ensured by a flame proof path which is located at the electrical connection conduit.

4. Important mounting instructions for Conduit connection

Mechanical Connection

The process installation of the transmitter may only be carried out utilizing the flats on the process connection side.

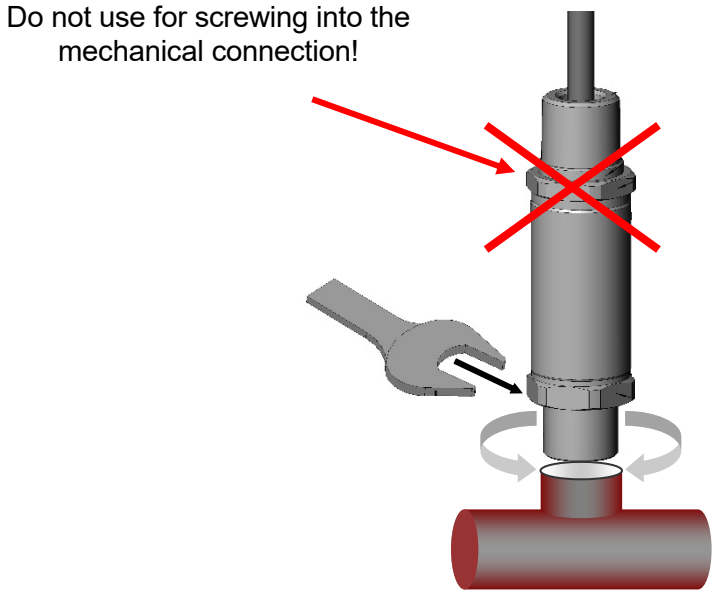

Electrical Installation

The electrical installation of the transmitters may only be carried out utilizing the flats on the electrical connection side.

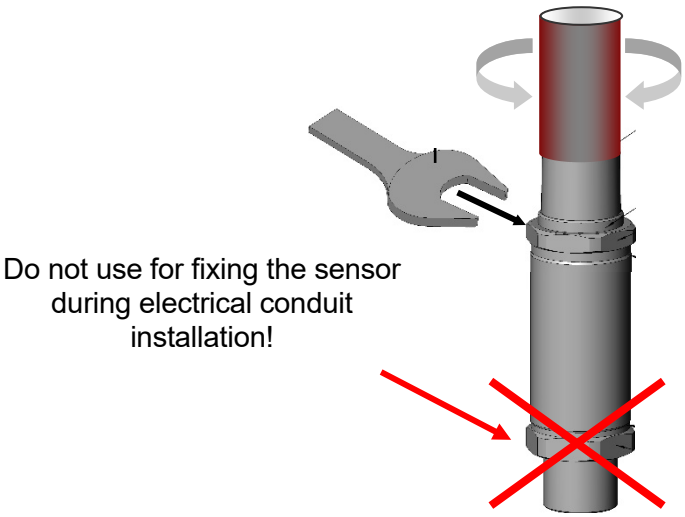

5. General Safety Precautions

The temperature transmitters may no longer be used when the label becomes illegible.

The seals must be checked to see that they function properly at regular intervals in keeping with the climatic conditions and the influence of the media, and to be changed as needed. Replacement seals can be obtained from HYDAC ELECTRONIC GMBH. (Standard seals, see technical data) This check is to be carried out at least every three years.

If there is damage to the unit or connecting lead, these components are to be replaced

It is imperative that the measurement fluid is compatible with the materials used in the transmitter. Similarly, the Maximum Working Pressure must be adhered to without fail. For these specifications, see the “Technical data”. The **M**aximum **W**orking **P**ressure is also shown at the transmitter label as **MWP**. The "Safety relevant Information" in the certificates must also be met.
The data pertaining to use in hazardous location is to be heeded in any event.

The temperature transmitter has to be installed and operated in a way that electrostatic charges, caused by operation, maintenance and cleaning, can be excluded.
For the application in potentially dust-explosive areas, process-related electrostatic charge, i.e. due to fluids flowing past, has to be excluded.

The devices must be grounded during installation. The suitability of the grounding shall be subject to the acceptance of the local inspection authority having jurisdication. Limited energy powered according to CAN/UL 61010 (Clause 9.4), Class 2 UL1310, LPS (CAN/UL 60950).

<u>Note for use for electrical connection in general (except connection head aluminum, model code character J):</u>

- For Class I, II and III: Seal not required.

<u>Note for use for electrical connection” integrated cable” with model code character 9, G, U and W:</u>

- The installation is to be carried out by a properly qualified specialist in accordance with the pertinent regulations pertaining to potentially explosive environments (e.g. IEC / EN 60079-14).
- A fixed installation is required.

<u>Note for use for electrical connection by using e.g. a conection head or junction box.</u>
In general, when transmitters are connected to a junction box or connection head always respect the schedule of limitations.

The certificates for devices with connection head assembled from HYDAC Electronic (model code character J and Q) are supplied as an appendix.

Excerpt of the certificates from the manufacturers Limatherm and Pushna as example for schedule of limitations:

- Aluminum connection head (model code character J), manufacturer Limatherm, series XD-AD:
  - Excerpt CSA certificate:
    “For Class I Group A and for Class I Zone 1 installation a conduit seal is required within 18 inches of enclosure”
  - Excerpt ATEX / IECEx certificate:
    “No. 2 from Schedule of limitations: For Information on the dimensions of the flameproof joints the manufacturer shall be contacted”.

- Stainless steel connection head (model code character Q), manufacturer Pushna, series 1016 PSEM
  - Excerpt CSA certificate:
    “Open circuit before removing cover”

- Excerpt ATEX / IECEx certificate:
  “No. 8 from Schedule of limitations: Consult the manufacturer if dimensional information on the flameproof joints is necessary”

<u>Important note for the use in mining applications:</u>

The chemical resistance for transmitters with electrical conduit connection with single leads or jacketed cable is not tested for the use in mining applications according to ATEX and IECEx equipment group I.
When used in mining applications a conduit hose or pipe is to be installed at the ½-14 NPT or M20x1.5 electrical connection and the cable or leads are to run inside the conduit until an area is reached which is not contaminated with chemicals.

6. Technical Data

6.1 ETS 4000 Standard without optional pressure measurement

Input data	**ETS 4100**	**ETS 4500**
Measuring range	-25 .. +100 °C [-13 .. +212 °F]	
Probe length	10.4 (SAE6); 10.7 (G1/4); 100; 250; 350, 437 mm	
Maximum **W**orking **P**ressure (MWP)	600 bar [8700 psi] probe length 10.4/ 10.7 mm [0.409/ 0.421 Inch] 125 bar [1800 psi] probe length 100 mm [3.937 Inch] 125 bar [1800 psi] probe length 250 mm [9.843 Inch] 125 bar [1800 psi] probe length 350 mm [13.779 Inch] 125 bar [1800 psi] probe length 437 mm [17.205 Inch]	
Mechanical connection (Tightening torque, recommended)	G1/4 ISO 1179-2, male (20 Nm) 9/16-18 UNF 2A (SAE6), male (20 Nm) 1/4-18 NPT, male (40 Nm)	
Parts in contact with fluid	1.4571(316Ti); 1.4301 (304) Seal: FKM (SAE6 and G1/4)	
Conduit / housing material	1.4435 (316LMHO); 1.4404 (316L)	
Output data		
Output signal, permitted load resistance	4 .. 20 mA with HART protocol R_{Lmax} = (U_B – 12 V) / 20 mA [kΩ] for HART communication min. 250Ω	
HART Communication	According to HART 7 specifications	
HART Common Practice Commands i.e.	Altering of measuring range limits (see table)	
Accuracy (at room temperature)	≤ ± 0.4 % FS typ. ≤ ± 0.8 % FS max.	≤ ± 1.0 % FS typ. ≤ ± 2.0 % FS max.
Temperature drift (environment)	≤ ± 0.01 % FS/°C [0.006 % FS/°F]	≤ ± 0.02 % FS/°C [0.01 % FS/°F]
Rise time to DIN EN 60751	t_{50}: ~ 10 s t_{90}: ~ 15 s	
Environmental conditions		
Operating/ Ambient temperature range [1) 2)]	T6, T110°C: -40 .. +60°C / -20 .. +60 °C [-40 .. +140 °F/ -4 .. +140 °F] T5, T120°C: -40 .. +70°C / -20 .. +70 °C (-40 .. +158 °F/ -4 .. +158 °F]	
Fluid temperature range [1) 2)]	T6, T110°C: -40 .. +60°C / -20 .. +60 °C [-40 .. +140 °F/ -4 .. +140 °F] T5, T120°C: -40 .. +70°C / -20 .. +70 °C (-40 .. +158 °F/ -4 .. +158 °F]	
Storage temperature range	-40 .. +100 °C [-40 .. +212 °F]	
CE - mark, UKCA - mark	EN 61000-6-1 / 2 / 3 / 4 EN 60079-0/ 1/ 31	
Vibration resistance to IEC 60068-2-6 at 10..500Hz	≤ 10 g ≤ 5 g with connection head	
Protection class to IEC 60529 [3)] ISO 20653	IP 68 (versions with connection head), IP 69 IP 6K9K	
Other data		
Supply voltage [4)]	12 .. 30 V DC	
Residual ripple of supply voltage	acc. to FSK Physical Layer Specification (HCF_SPEC-054)	
Current consumption	≤ 25 mA	
Weight (without Connection head)	approx. 280 g sensor lenght 10.4/ 10.7 mm [0.409/ 0.421 Inch] approx. 315 g sensor length 100 mm [3.937 Inch] approx. 350 g sensor length 250 mm [9.843 Inch] approx. 385 g sensor length 350 mm [13.779 Inch] approx. 420 g probe length 17.205 inch [437 mm]	

Notes:
Reverse polarity protection of the supply voltage, excess voltage, override and short circuit protection are provided.

FS (**F**ull **S**cale) = relative to the full measuring range
1) -4 °F [-20 °C] with FPM seal, seal material up to -40 °F[-40°C] on request
2) T130° at Ta = -40 .. 70°C/ -20 .. 70°C only with electrical connection single core available as an option
3) Cable gland must cover IP 68 and the ½-14 NPT thread must be sealed by thread sealant
4) Limited energy powered according to CAN/UL 61010 (Clause 9.4), Class 2 UL1310, LPS (CAN/UL 60950)

6.2 ETS 4000 with optional pressure measurement

General parameters: See 6.1 ETS 4100 / ETS 4500 Standard

Additional technical data with pressure option:

Input data		**ETS 4100**				**ETS 4500**		
Measurement range	bar	16	40	60	100	250	400	600
Overload range	bar	32	80	120	200	500	800	1000
Burst pressure	bar	100	200	300	500	1000	2000	2000
Measurement range	psi	300	500	1000	3000	5000	6000	9000
Overload range	psi	725	1160	2900	7250	11600	11600	14500
Burst pressure	psi	1800	2900	7250	14500	29000	29000	29000
Mechanical Connection		G1/2 A ISO 1179-2 with probe						
Tightening torque, recommended		45 Nm						
Parts in contact with fluid		Stainless: 1.4542(630); 1.4548(630) Seal: FKM						
Probe length		7 mm						
Output data								
Output signal temperature		4 .. 20 mA with HART protocol						
Output signal pressure		Available as a secondary variable via HART protocol as a digital signal.						
Accuracy acc. to DIN 16086, terminal based	Typ. Max.	≤ ± 0.25 % FS ≤ ± 0.5 % FS				≤ ± 0.5 % FS ≤ ± 1.0 % FS		
Accuracy B.F.S.L	Typ. Max.	≤ ± 0.15 % FS ≤ ± 0.25 % FS				≤ ± 0.25 % FS ≤ ± 0.5 % FS		
Temperature compensation Zero point	Typ. max	≤ ± 0.008 % /°C [0.004 % FS /°F] ≤ ± 0.015 % /°C [0.008% FS /°F]				≤ ± 0.015 % /°C [0.008% FS /°F] ≤ ± 0.025 % /°C [0.014 % FS /°F]		
Temperature compensation Span	Typ. max	≤ ± 0.008 % /°C [0.004 % FS /°F] ≤ ± 0.015 % /°C [0.008% FS /°F]				≤ ± 0.015 % /°C [0.008% FS /°F] ≤ ± 0.025 % /°C [0.014 % FS /°F]		
Non-linearity acc. to DIN 16086, terminal based	max	≤ ± 0.3 % FS				≤ ± 0.3 % FS		
Hysteresis	max	≤ ± 0.1 % FS				≤ ± 0.4 % FS		
Repeatability		≤ ± 0.05 % FS				≤ ± 0.1 % FS		
Long-term drift	Typ.	≤ ± 0.1 % FS / year				≤ ± 0.3 % FS / year		
Environmental conditions								
Compensated temperature range		-25 .. +85° C						
Protection class to IEC 60529 [1)] ISO 20653		IP 65 (Vented Gauge), IP 68 (versions with connection head, seald gauge), IP 69 (Sealed Gauge) IP 6K9K (Sealed Gauge)						
Life expectancy		> 10 million load cycles (0 .. 100 % FS)						

[1)] Cable gland must cover IP 68 and the ½-14 NPT thread must be sealed by thread sealant

6.3 Measuring Range Limits:

By means of HART Common Practice Commands, you have the opportunity to adjust the following measuring ranges:

Measuring range limits of the primary variable, temperature:

Lower measuring range limit		Upper measuring range limit		Measuring span	
min	max	min	max	min	max
-25 °C	75°C	0°C	100°C	25°C	125°C

Additional measuring range limits of the secondary variable, pressure:

Lower measuring range limit		Upper measuring range limit		Measuring span	
min	max	min	max	min	max
0 % FS	112.5% FS	37.5% FS	150% FS	37.5% FS	150% FS

6.4 Protocol

HART Version: 7
Manufacturer Code: 0x605E
Manufacturer String: HYDAC ELECTRONIC
Device Type Code: 0xE2A8 version with temperature as PV
0xE2A9 version with temperature as PV and pressure as SV

7. Model code to identify the delivered part

7.1 ETS 4000 without optional pressure measurement

ETS 4 X X X – F21– XXX – D – 000 (XXX)

Accuracy
1 = 0.4 % typ.
5 = 1 % typ.

Mechanical connection
4 = G 1/4 ISO 1179-2, male
7 = 9/16-18 UNF 2A (SAE6), male
(only for probe length “010”)
8 = 1/4-18 NPT, male
(only for probe length “100”, “250”, “350”, “437”)

Electrical connection
9 = 1/2-14 NPT Conduit (male) ; single lead
G = 1/2-14 NPT conduit (male), jacketed cable
J = Connection head (aluminum)
Q = Connection head (stainless steel)
U = M20x1.5 conduit (male), jacketed cable
W = M20x1.5 conduit (male), single leads

Output signal
F21 = 4 .. 20 mA (with HART Protocol)

Probe length
010 = 10,4 /10,7 mm [0,409/ 0,421 Inch] (only with SAE6 or G1/4)
100 = 100 mm [3,937 Inch] (only with G1/4 or 1/4-18 NPT)
250 = 250 mm [9,843 Inch] (only with G1/4 or 1/4-18 NPT)
350 = 350 mm [13,779 Inch] (only with G1/4 or 1/4-18 NPT)
437 = 437 mm [17.205 Inch] (only with 1/4 -18 NPT)

Approval
D = CSA Explosion Proof - Seal not required
ATEX - Flame Proof
IECEx - Flame Proof

Modification Number
000 = standard

For units with a different modification number, please read the label or the technical amendment details supplied with the unit.

Cable length
Shown in m or “ (inch)

7.2 ETS 4000 with optional pressure measurement

ETS 4 X 2 X – F21 - 007 - P - XXXXX – DX – XXX (XXX)

Accuracy
1 = 0.4 % typ.
5 = 1 % typ.

Mechanical connection
2 = G1/2 A ISO 1179-2

Electrical connection
9 = 1/2-14 NPT Conduit (male) ; single lead
G = 1/2-14 NPT conduit (male), jacketed cable
J = Connection head (aluminum)
Q = Connection head (stainless steel)
U = M20x1.5 conduit (male), jacketed cable
W = M20x1.5 conduit (male), single leads

Output signal
F21 = 4 .. 20 mA (with HART Protocol)

Probe length
007 = 7mm

With pressure measurement

Measuring range
4 digit for bar version
5 digit for psi version

Approval
D = CSA Explosion Proof - Seal not required
ATEX - Flame Proof
IECEx - Flame Proof

Type of measurement cell
S = Sealed Gauge (sealed to atmosphere) ≥ 40 bar
V = Vented Gauge (vented to atmosphere) < 40 bar

Modification Number
000 = standard

For units with a different modification number, please read the label or the technical amendment details supplied with the unit.

Cable length
Shown in m or “ (inch)

8. Serial number

The serial number includes the calendar week and year of manufacture of the unit, adjacent to the sequential serial number.

Configuration of serial number (SN): xyykzzzzzz

X	Manufacturing year	e.g.: 3 → 2023
yy	Calendar week	e.g.: 11 → CW 11
k	Change control status	e.g.: -, A, B
zzzzzz	Sequential serial number	e.g.: 111111

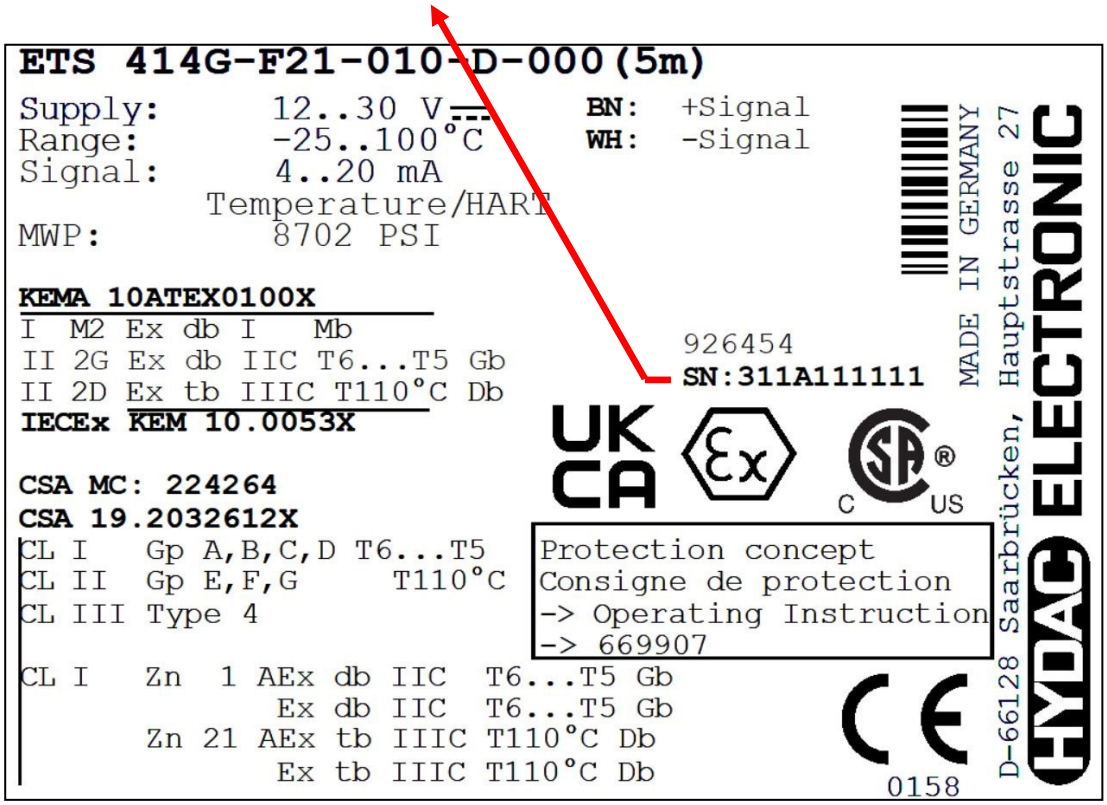

9. Pin connection

Conduit (single leads)/ Connection head

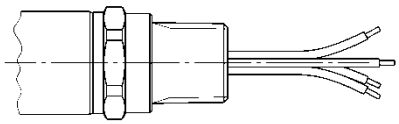

Wire	ETS 45x9-A
red	Signal +
black	Signal -
green-yellow	Housing

Conduit (open ended cable)

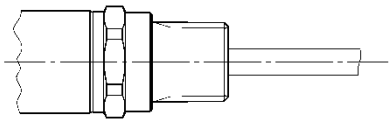

Wire	ETS 45xG-A
white	Signal -
brown	Signal +
green	n.c.
yellow	n.c.

10. Dimensions

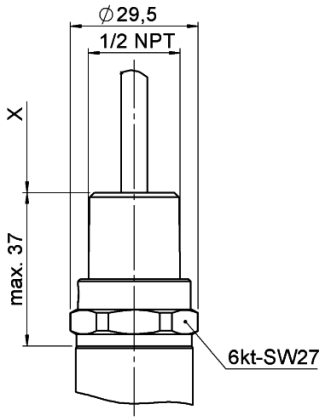

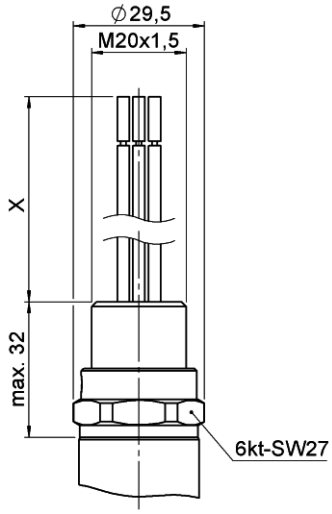

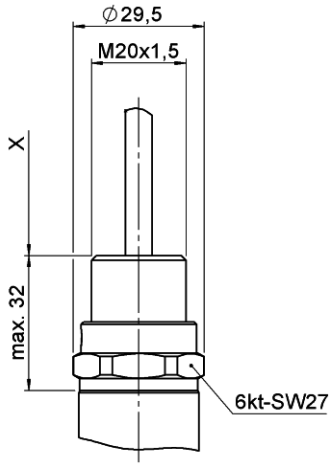

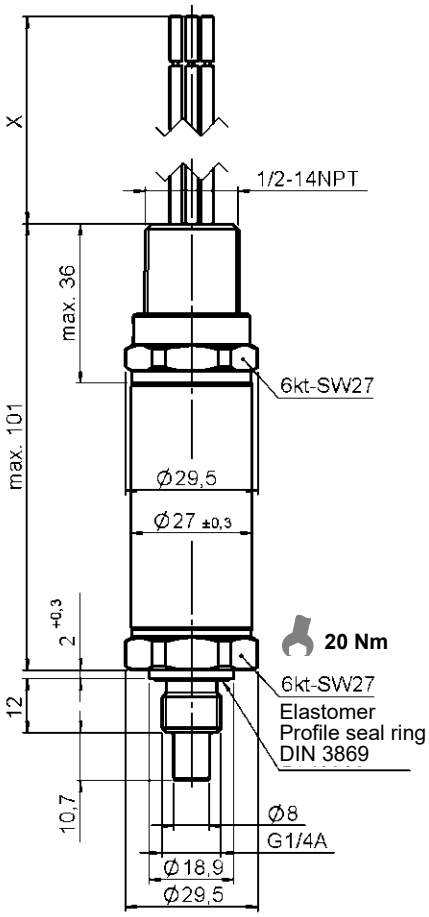

Mechanical connection with pressure measurement option

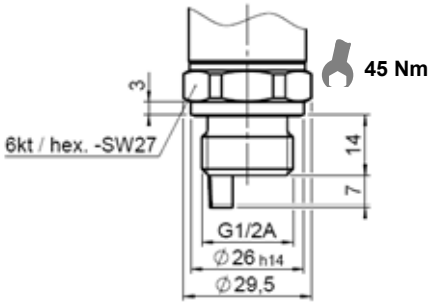

Probe lenght (Z)
100 mm (3,937“)
250 mm (9,843“)
350 mm (13,779“)
437 mm (17,205)

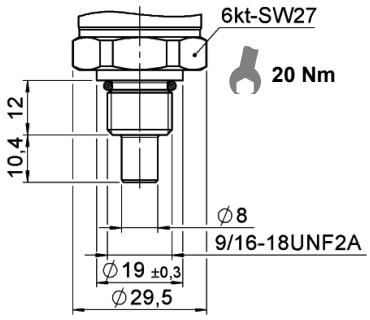

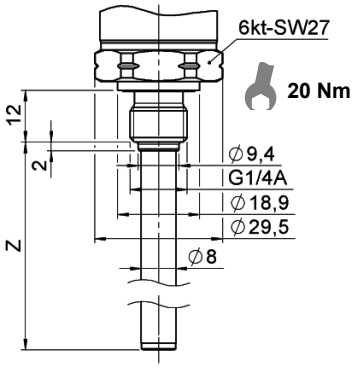

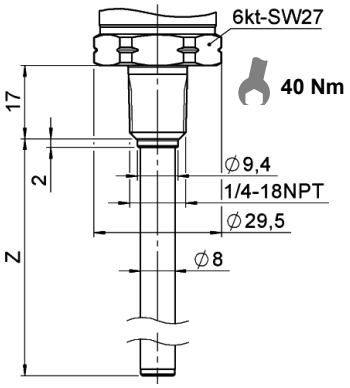

11. Connection head

Aluminum:

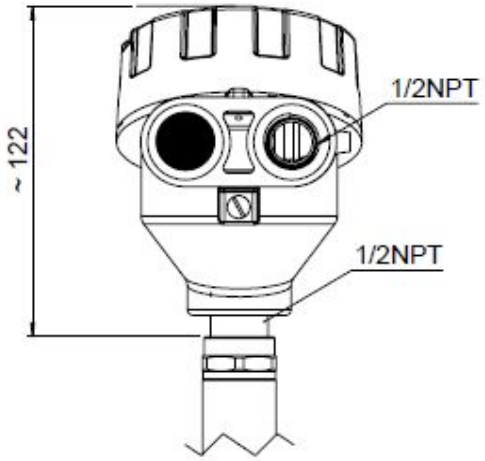

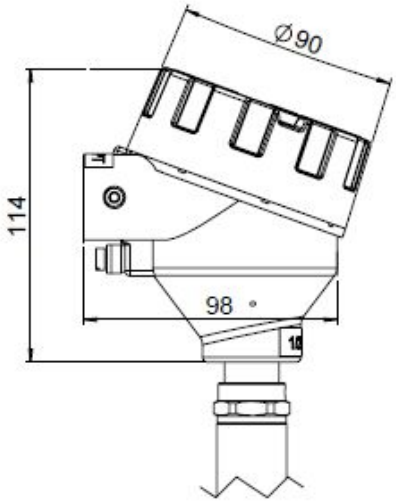

Stainless steel:

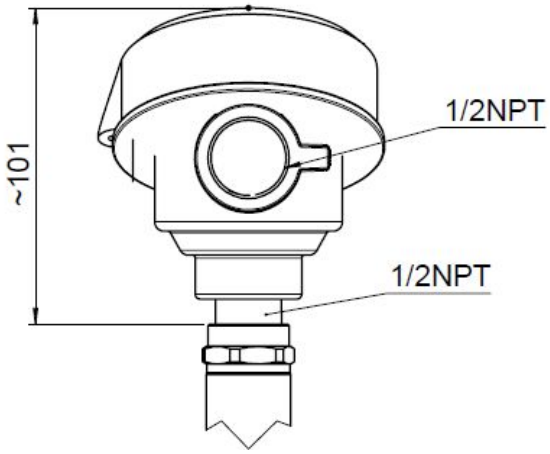

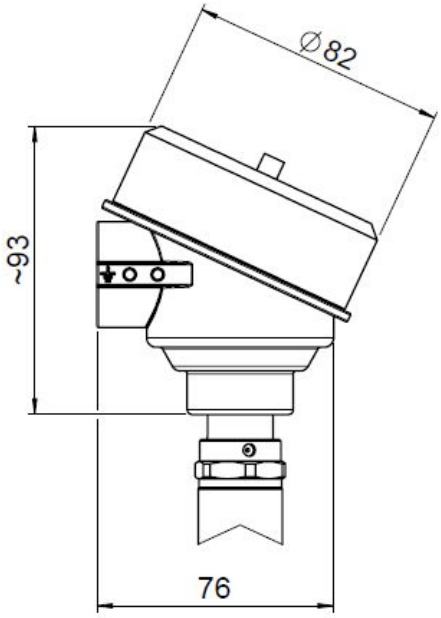

HYDAC ELECTRONIC GMBH
Hauptstraße 27
D-66128 Saarbrücken
Germany

Web : www.hydac.com
E-mail : electronic@hydac.com
Tel.: +49 (0)6897 509-01
Fax: +49 (0)6897 509-1726

HYDAC SERVICE
If you have any questions concerning repair work, please don't hesitate to contact HYDAC SERVICE:

HYDAC SERVICE GMBH
Hauptstr. 27
D-66128 Saarbrücken
Germany

Tel.: +49 (0)6897 509-1936
Fax: +49 (0)6897 509-1933

Notice

The information and particulars provided in this manual apply to the operating conditions and applications described herein. In the event of deviating applications and/or operating conditions, please contact the respective HYDAC department concerned.

If you have any questions, suggestions, or encounter any problems of a technical nature, please contact your HYDAC representative.

All technical details are subject to change without notice.

A1 Kontrollzeichnungen / Control Drawing

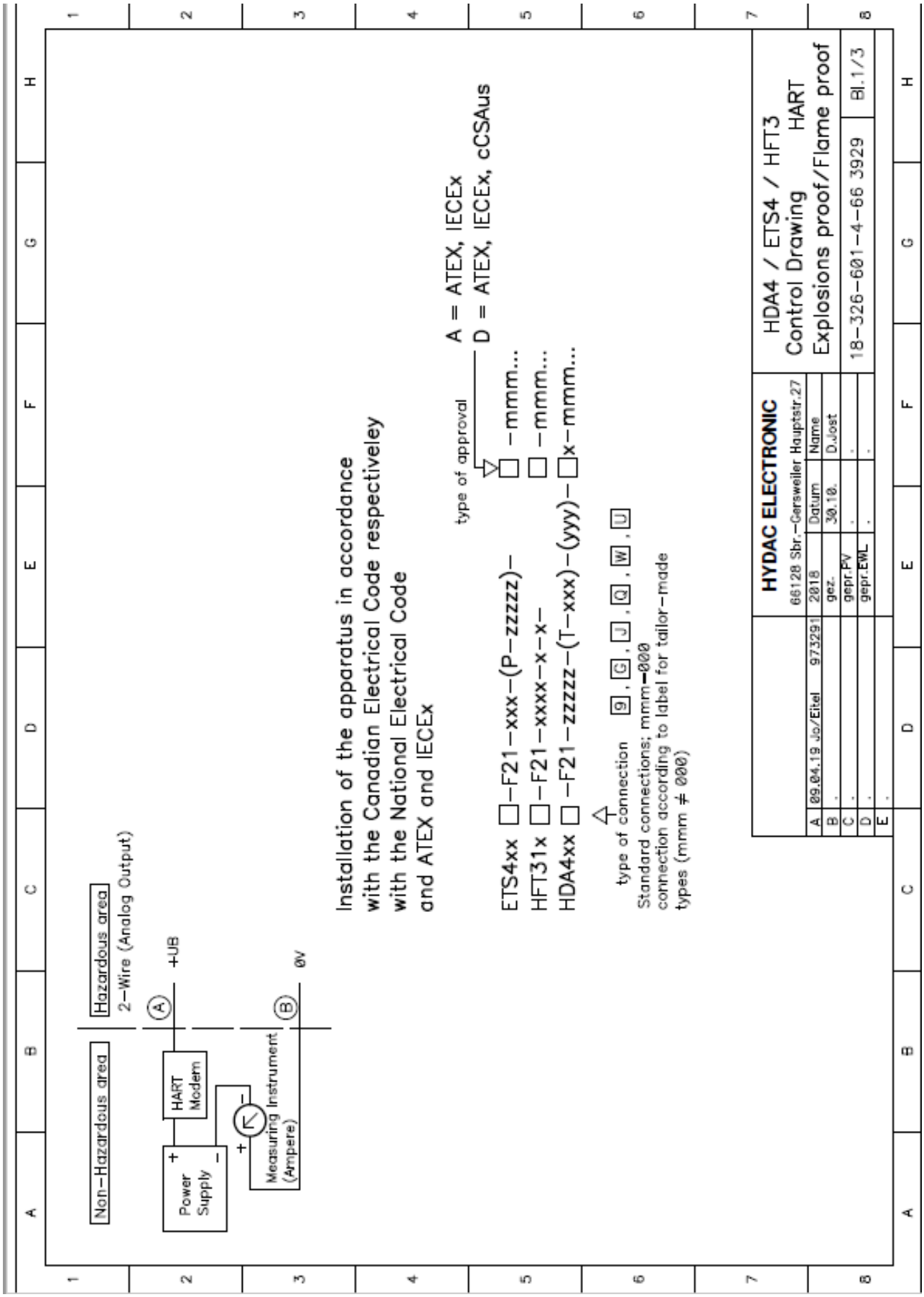

Mise à la terre:

Les exigences liées aux normes (voir spécification techniques) ne seront respectées,que si le boîtier du capteur est correctment relié à la terre.La compensation de potentiel,doit nécessaire-ment etre réalisée.Si des prises MiniMess sont utilisées,le boîtier de chacune d'elles doît etre mis à la terre séparément.

- L appareil (capteur) doit etre mis à la terre pendant l'installation.
- La conformité de la mise à la terre,doit etre approuvée par l'organisme local d'inspection,ayant juridiction.
- Si un fil vert est disponible,celui-ci peut etre utilisé pour une mise à la terre supplémentaire de l'appareil, par contre ce fil ne peut pas être utilisée seul en tant que connexion à la terre.

Grounding:

The requirements of the standards (see technical specifikations) cannot be satisfied unless the unit's housing is properly grounded. Potential equalization has to be provided. When using hose mounting, the housing has to be grounded separately.

—The devices must be grounded during installation.

—The suitability of the grounding shall be subject to the acceptance of the local inspection authority having jurisdiction.

—If a green wire is available,it can be used additionally for grounding,but may not be used on it's own as the grounding connection

cCSAus
Class I Groups A,B,C,D, T6, T5
Class II Groups E,F,G, T110°C,120°C
Class III
Type 4

Class I Zone 1 AEx db IIC T6, T5 Gb
Ex db IIC T6, T5 Gb
Zone 21 AEx tb IIIC T110°C,120°C Db
Ex tb IIIC T110°C,120°C Db

Seal not required
Aucun joint d'étanchéité n'est requis

ATEX
I M2 Ex db I Mb
II 2G Ex db IIC T6,T5 Gb
II 2D Ex tb IIIC T110°C,120°C Db

IECEx
Ex db I Mb
Ex db IIC T6,T5 Gb
Ex tb IIIC T110°C,120°C Db

T6,T5,T110°C,T120°C if noted on label
si indiqué sur l'étiquette

Ambient Temperature max. +60°C (T6,T110°C)
Ambient Temperature max. +70°C (T5;T120°C)

g , G 1/2" NPT male conduit

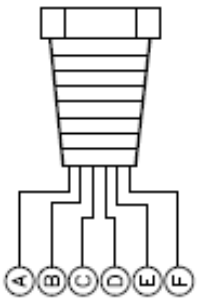

g = single leads
G = jacketed cable

W , U M20x1,5 male conduit

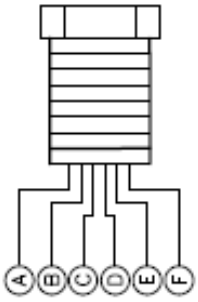

W = single leads
U = jacketed cable

For detailed wiring information see product label

A	09.04.19 Jo/Eiel	973291	
B	.		
C	.		
D	.		
E	.		

HYDAC ELECTRONIC
66128 Sbr.-Gersweiler Hauptstr.27

	Datum	Name
2018		
gez.	30.10.	D.Jost
gepr.PV	.	.
gepr.EML	.	.

HDA4/ETS4/HFT3 HART
Control Drawing
Explosion proof/Flame proof
18-326-601-4-66 3929 Bl.2/3

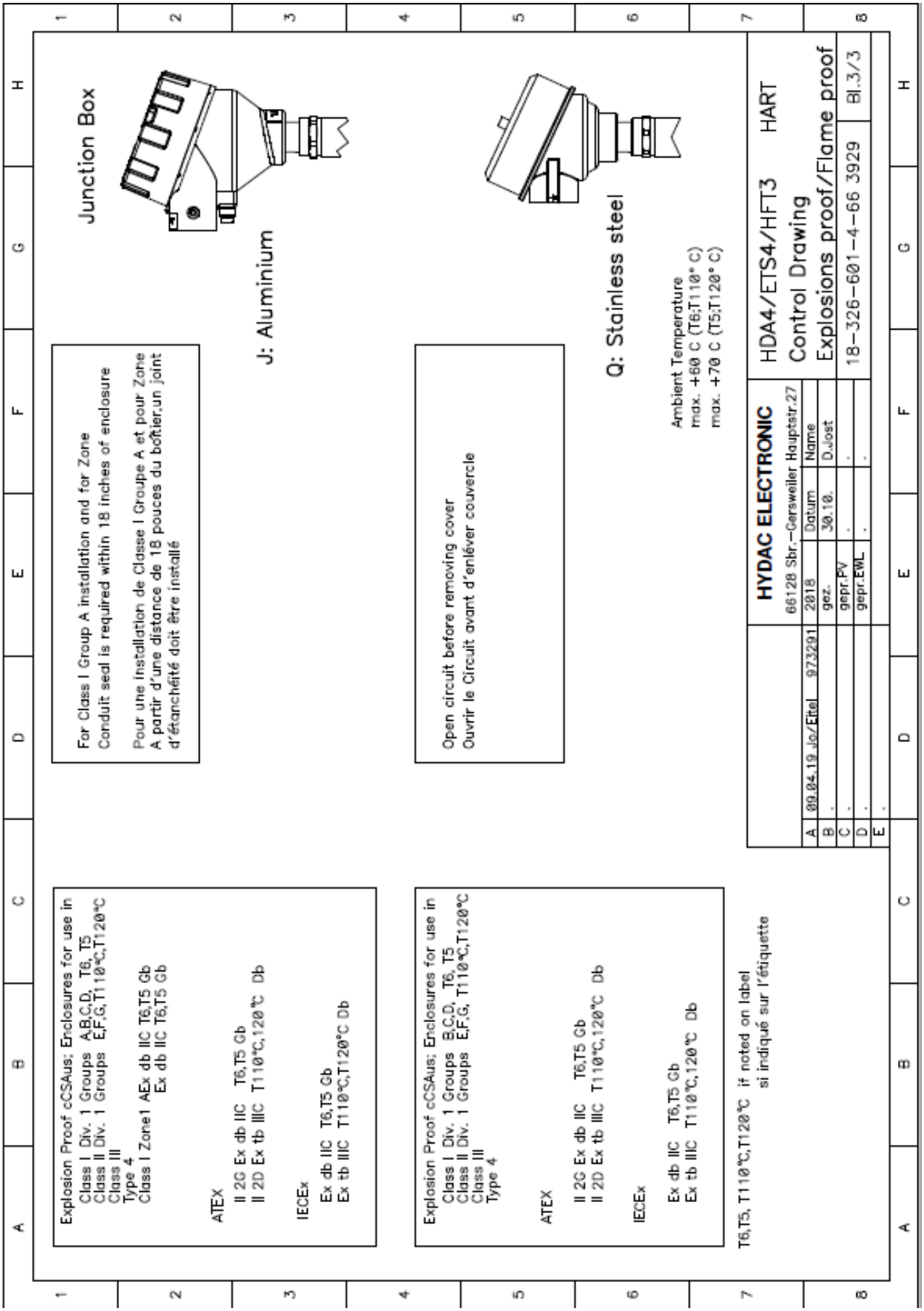
Junction Box
J: Aluminium
Q: Stainless steel
For Class I Group A installation and for Zone
Conduit seal is required within 18 inches of enclosure
Pour une installation de Classe I Groupe A et pour Zone
A partir d'une distance de 18 pouces du boîtier,un joint
d'étanchéité doit être installé
Open circuit before removing cover
Ouvrir le Circuit avant d'enlèver couvercle
Ambient Temperature
max. +60 C (T6;T110° C)
max. +70 C (T5;T120° C)
Explosion Proof cCSAus; Enclosures for use in
Class I Div. 1 Groups A,B,C,D, T6, T5
Class II Div. 1 Groups E,F,G,T110°C,T120°C
Class III
Type 4
Class I Zone1 AEx db IIC T6,T5 Gb
Ex db IIC T6,T5 Gb
ATEX
II 2G Ex db IIC T6,T5 Gb
II 2D Ex tb IIIC T110°C,120°C Db
IECEx
Ex db IIC T6,T5 Gb
Ex tb IIIC T110°C,T120°C Db
Explosion Proof cCSAus; Enclosures for use in
Class I Div. 1 Groups B,C,D, T6, T5
Class II Div. 1 Groups E,F,G, T110°C,T120°C
Class III
Type 4
ATEX
II 2G Ex db IIC T6,T5 Gb
II 2D Ex tb IIIC T110°C,120°C Db
IECEx
Ex db IIC T6,T5 Gb
Ex tb IIIC T110°C,120°C Db
T6,T5, T110°C,T120°C if noted on label
si indiqué sur l'étiquette
HYDAC ELECTRONIC
66128 Sbr.-Gersweiler Hauptstr.27
HDA4/ETS4/HFT3 HART
Control Drawing
Explosions proof/Flame proof
18-326-601-4-66 3929
Bl.3/3
A 09.04.19 Jo/Etel 973291
2018 Datum Name
gez. 30.10. D.Jost
gepr.PV
gepr.EWL

A2 Zertifikat ATEX / Certificate ATEX

CERTIFICATE

(1) **EU-Type Examination**

(2) **Equipment or protective systems intended for use in potentially explosive atmospheres - Directive 2014/34/EU**

(3) EU-Type Examination Certificate Number: **KEMA 10ATEX0100 X** Issue Number: **6**

(4) Product: **Pressure Transducers, Pressure Switches, Temperature Transducers, Flow Rate Transmitters, Bladder Integrity Sensors and Connection heads**

(5) Manufacturer: **HYDAC Electronic GmbH**

(6) Address: **Hauptstraße 27, 66128 Saarbrücken-Gersweiler, Germany**

(7) This product and any acceptable variation thereto is specified in the schedule to this certificate and the documents therein referred to.

(8) DEKRA Certification B.V., Notified Body number 0344 in accordance with Article 17 of Directive 2014/34/EU of the European Parliament and of the Council, dated 26 February 2014, certifies that this product has been found to comply with the Essential Health and Safety Requirements relating to the design and construction of products intended for use in potentially explosive atmospheres given in Annex II to the Directive.

The examination and test results are recorded in confidential test report number NL/KEM/ExTR10.0022/06.

(9) Compliance with the Essential Health and Safety Requirements has been assured by compliance with:

EN IEC 60079-0 : 2018 **EN 60079-1 : 2014** **EN 60079-31 : 2014**

except in respect of those requirements listed at item 18 of the Schedule.

(10) If the sign "X" is placed after the certificate number, it indicates that the product is subject to the Specific Conditions of Use specified in the schedule to this certificate.

(11) This EU-Type Examination Certificate relates only to the design and construction of the specified product. Further requirements of the Directive apply to the manufacturing process and supply of this product. These are not covered by this certificate.

(12) The marking of the product shall include the following:

I M 2 Ex db I Mb
II 2 G Ex db IIC T6...T4 Gb
II 2 D Ex tb IIIC T110 °C...T130 °C Db

Date of certification: 17 august 2022

DEKRA Certification B.V.

L.G. van Schie
Certification Manager

Page 1/4

DEKRA Certification B.V. Meander 1051, 6825 MJ Arnhem P.O. Box 5185, 6802 ED Arnhem The Netherlands
T +31 88 96 83000 F +31 88 96 83100 www.dekra-product-safety.com Registered Arnhem 09085396

DEKRA

(13) **SCHEDULE**

(14) **to EU-Type Examination Certificate KEMA 10ATEX0100 X** Issue No. 6

(15) **Description**

HDA 4xxx

Electronic Pressure Transducer with analogue output.

Depending on the applied pressure on the sensor cell a proportional output signal is generated. One version has an additional temperature sensor.
It provides an analogue signal or analogue signal combined with a HART digital protocol.

EDS 4xxx

Electronic Pressure switch.

Depending on the applied pressure on the sensor cell a proportional internal signal is generated. Depending on the factory set fixed value or programmable set point an electronic switch changes its status.

ETS 4xxx

Temperature Transducer

Depending on the applied temperature on the sensor a proportional output signal is generated. One version has an additional pressure sensor.
It provides an analogue signal or analogue signal combined with a HART digital protocol.

HFT 31xx

Flow Rate Transmitter

An impellor driven by the speed of the flow of the liquid or gas through a turbine generates a signal pick up by a proximity switch, converted to a linear analogue current signal and is available via a HART interface.

BIS 1xxx

Bladder Integrity Sensor

The bladder status signal is provided as a switching signal. Depending on the version, the temperature or pressure signal measured by the sensor is converted into a proportional analogue current signal and is available via a HART interface.

HPT 5xx

Electronic differential pressure transmitter with analogue output.

Depending on the applied differential pressure a piston with integrated magnet is shifted linearly. A Hall sensor is detecting the position and passes on the position to the evaluation electronics which calculates the output signal.

HPS 5xx

Same as HPT 5xx but with an output with an electronic switch.

Optional Connection Heads

Limatherm Type XD-AD and Pushna Type 1016 PSEM Ex d and Ex t certified enclosures.

DEKRA

(13) **SCHEDULE**

(14) **to EU-Type Examination Certificate KEMA 10ATEX0100 X** Issue No. 6

Type Codes

Pressure Transducer	HDA 4abc-d-eeee(e)-fg-hhh(psi)iiij	
	HDA 4aZc-d-eeee(e)-kkk-fg-hhh(psi)iiij	
	HDA 4abc-F21-eeee(e)-fg-hhh(iiij)	Standard
	HDA 4abc-F21-eeee(e)-T-III-fg-hhh(iiij)	With temperature measurement
	HDA 4aZc-F21-eeee(e)-kkk-fg-hhh(iiij)	With front flush membrane
Pressure Switch	EDS 4abc-dddd(d)-ef-gh-iiii(psi)kkkl	
Temperature Transducer	ETS 45ab-c-d-eee-fff-gggh	
	ETS 4abc-F21-kkk-f-hhh(iiij)	Standard
	ETS 4abc-F21-kkk-P-eeee(e)-fg-hhh(iiij)	With pressure measurement
Flow Rate Transmitter	HFT 31bc-F21-eeee-S-X-f-hhh(iiij)	
Bladder Integrity Sensor	BIS 1abc-F21-eeee(e)-fg-hhh(iiij)	
Difference Pressure Transmitter	HPT 50c-d-eeee-S-f-hhh(psi)iiij	
	HPS 50c-pppp-ef-S-g-hhh(psi)iiij	

Rated ambient temperature range
xxx-xxxx-F21-xxx
-40 °C to +60 °C for T6 and T110 °C
-40 °C to +70 °C for T5 and T120 °C

EDS with max. 2 x 1,2 A output signal
-40 °C to +80 °C for T4
-40 °C to +60 °C for T110 °C
-40 °C to +70 °C for T120 °C
-40 °C to +80 °C for T130 °C

Other
-40 °C to +60 °C for T6 and T110 °C
-40 °C to +70 °C for T120 °C
-40 °C to +80 °C for T5 and T130 °C

For details of the variables refer to Annex 1.

Electrical data

Supply Voltage: 30 Vdc / 6 Vdc for 10%..90% ratiometric
Input Current: 25 mA or 1,3 A

For details refer to Annex 1.

Installation instructions

The instructions provided with the product shall be followed in detail to assure safe operation.

(16) **Report Number**

No. NL/KEM/ExTR10.0022/06.

Page 3/4

Form 227A
Version 2 (2019-06)

DEKRA

(13) **SCHEDULE**

(14) **to EU-Type Examination Certificate KEMA 10ATEX0100 X** Issue No. 6

(17) **Specific conditions of use**

The ambient temperature range of the equipment is as indicated at 'Rated ambient temperature range' above.

When used in mining applications a conduit hose or pipe is to be installed at the ½ 14 NPT or M20x1,5 electrical connection and the cable or leads are to run inside the conduit until an area is reached which is not contaminated with chemicals.

Electrostatic charging on non-metallic parts shall be avoided. See installation instructions for details.

(18) **Essential Health and Safety Requirements**

Covered by the standards listed at item (9).

(19) **Test documentation**

As listed in Report No. NL/KEM/ExTR10.0022/06.

(20) **Certificate history**

Issue 1 -	212423500	Initial certificate.
Issue 2 -	215511300	Minor constructional changes and addition of Ex tb
Issue 3 -	216122900	Minor constructional changes, model Type BIS 1000-F added and Name change of the Pressure Transmitter.
Issue 4 -	218185700	Update to the latest standards, changed ambient temperature range and Addition of new type of Temperature Transducer.
Issue 5 -	222806200	Addition of: transmitter HPT500 and HPS500, electrical connection M20x1,5 and optional connection heads; Adjustment of type/model codes
Issue 6 -	226247500	Assesment per EN IEC 60079-0: 2018 Minor constructional changes

Page 4/4

Form 227A
Version 2 (2019-06)

A3 Zertifikat CSA / Certificate CSA

CSA GROUP™

Certificate of Compliance

Certificate: 2032612 **Master Contract:** 224264

Project: 70194250 **Date Issued:** July 18, 2019

Issued to: **Hydac Electronic GmbH**
Dept. ETW
Hauptstrasse 27
66128
Saarbrücken
Germany

Attention: **Alwin Eitel**

The products listed below are eligible to bear the CSA Mark shown with adjacent indicators 'C' and 'US' for Canada and US or with adjacent indicator 'US' for US only or without either indicator for Canada only.

C US

Issued by: Jens Ensminger

PRODUCTS

CLASS 2258 02 - PROCESS CONTROL EQUIPMENT - For Hazardous Locations
CLASS 2258 82 - PROCESS CONTROL EQUIPMENT - For Hazardous Locations - Certified to US Standards

Class I, Groups A, B, C and D T6 resp. T5 resp. T4A; Class II, Groups E, F and G T110°C resp. T120 °C resp. T130 °C; Class III; Type 4
Class I, Zone 1 AEx db IIC T6 resp. T5 resp. T4A Gb;
Zone 21 AEx tb IIIC T110°C resp. T120 °C resp. T130 °C Db
Ex db IIC T6 resp. T5 resp. T4A Gb; Ex tb IIIC T110°C resp. T120 °C resp. T130 °C Db

DQD 507 Rev. 2019-04-30 Page 1

Certificate: 2032612 **Master Contract:** 224264
Project: 70194250 **Date Issued:** July 18, 2019

- **Pressure Transducer - Standard** **HDA 4abc-d-eeee(e)-fg-hhh(psi)iiij**

a = accuracy	4 or 7 or 8
b = mechanical connection (pressure port)	any alphanumeric character (not critical to certification)
c = electrical connection	9 or G or J (not approved for tb) or Q (not approved for Group A, db and tb) or W or U
d = signal	any alphabetic character
e = pressure range	4 digits for range in bar or psi 5 digits for range in psi > 9999
f = approval	D or E (not approved for db and tb)
g = gauge type	any alphabetic character (not for f = E)
h = modification number	alphanumeric value
(psi)	(psi) for psi-version or "" for bar-version
I = length of cable	numeric value
j = cable length definition	Inch or " or cm or m
bar-version	iiij in brackets

Technical data:

Rated Supply Voltage	30 Vdc
Output Signal	0..10 V or 0..20 mA or 4..20 mA
or	
Rated Supply voltage	6 Vdc
Output Signal	10-90% ratiometric
Rated Input Current	25 mA
Maximum working pressure	37 to 30000 psi (0.26 MPa to 206.8 MPa)
Temperature	temperature code T6, T110°C: -40°C…+60°C T120°C : -40°C…+70°C temperature code T5, T130°C: -40°C…+80°C

- **Pressure Transducer – with front flash membrane** **HDA 4aZc-d-eeee(e)-kkk-fg-hhh(psi)iiij**

a = accuracy	4 or 7 or 8
Z = pressure port	front flush membrane
c = electrical connection	9 or G or J (not approved for tb) or Q (not approved for Group A, db and tb) or W or U
d = signal	any alphabetic character
e = pressure range	4 digits for range in bar or psi 5 digits for range in psi > 9999
f = approval	D or E (not approved for db and tb)
g = gauge type	any alphabetic character (not for f = E)
h = modification number	alphanumeric value
(psi)	(psi) for psi-version or "" for bar-version
I = length of cable	numeric value
j = cable length definition	inch or " or cm or m
k = front flash	alphanumeric value
bar-version	iiij in brackets

Technical data:

Rated Supply Voltage	30 Vdc
Output Signal	0..10 V or 0..20 mA or 4..20 mA
or	
Rated Supply voltage	6 Vdc
Output Signal	10-90% ratiometric
Rated Input Current	25 mA
Maximum working pressure	37 to 15000 psi (0.26 MPa to 103.4 MPa)

DQD 507 Rev. 2019-04-30 Page 2

Certificate: 2032612 **Master Contract:** 224264
Project: 70194250 **Date Issued:** July 18, 2019

Temperature	temperature code T6, T110°C:	-40°C…+60°C
	T120°C :	-40°C…+70°C
	temperature code T5, T130°C:	-40°C…+80°C

- **Pressure Transducer – HART** **HDA 4abc-F21-eeee(e)-fg-hhh(iiij)** **Standard**
  HDA 4abc-F21-eeee(e)-T-III-fg-hhh(iiij) **with Temp. Measurem.**
  HDA 4aZc-F21-eeee(e)-kkk-fg-hhh(iiij) **with front flush membr.**

a = accuracy	4 or 7 or 8
b = mechanical connection (pressure port)	any alphanumeric character (not critical to certification)
c = electrical connection	9 or G or J (not approved for tb) or Q (not approved for Group A, db and tb) or W or U
F21 = signal	4..20 mA (with HART Interface)
e = pressure range	4 digits for range in bar or 5 digits for range in psi
f = approval	D
g = gauge type	any alphabetic character
h = modification number	alphanumeric value
i = length of cable	numeric value
j = cable length definition	inch or " or cm or m
Z = pressure port	front flush membrane
k = pressure port	3 digits alphanumeric
T = Temperature measurement	digital with HART Interface
III = probe length	in mm, standard = 007

Technical data:

Rated Supply Voltage	30 Vdc	
Output Signal	4..20 mA	
Rated Input Current	25 mA	
Maximum working pressure	HDA 4abc-F21-eeee(e)-fg…	30000 psi (206.8 MPa)
	HDA 4aZc-F21-eeee(e)-kkk-fg…	30000 psi (206.8 MPa)
	HDA 4abc-F21-eeee(e)-T-III-fg…	10007.6 psi (69.0 MPa)
Temperature	temperature code T6, T110°C:	-40°C…+60°C
	temperature code T5, T120°C:	-40°C…+70°C

- **Pressure Switch – Standard "approval E - CSA"** **EDS 410-aaaa-b-f-ccc(psi)ddde**

a = pressure range	numeric value
b = number of switching outputs	1
f = approval	E (not approved for db and tb)
c = modification number	alphanumeric value
(psi)	(psi) for psi-version or "" for bar-version
d = length of cable	numeric value
e = cable length definition	inch or " or cm or m
bar-version	ddde in brackets

Technical data:

Rated Supply Voltage	30 Vdc	
Output Signal	e = 1: 1.2A max	
Rated Input Current	1.3 A	
Maximum working pressure	100 to 30000 psi (0.69 MPa to 206.8 MPa)	
Temperature	temperature code T6:	-40°C…+60°C
	temperature code T5:	-40°C…+80°C

DQD 507 Rev. 2019-04-30 Page 3

Certificate: 2032612 **Master Contract:** 224264
Project: 70194250 **Date Issued:** July 18, 2019

- **Pressure Switch – Standard** **EDS 4abc-dddd(d)-ef-gh-iiii(psi)kkkl**

a = accuracy	4 or 7
b = mechanical connection (pressure port)	any alphanumeric character (not critical to certification)
c = electrical connection	9 or G or J (not approved for tb) or Q (not approved for Group A, db and tb) or W or U
d = pressure range	4 digits for range in bar or psi 5 digits for range in psi > 9999
e = number of switching outputs	1 or 2
f = output type	F or P
g = approval	D
h = gauge type	any alphabetic character
i = modification number	alphanumeric value
(psi)	(psi) for psi-version or "" for bar-version
k = length of cable	numeric value
l = cable length definition	inch or " or cm or m
bar-version	kkkl in brackets

Technical data:

Rated Supply Voltage	30 Vdc
Output Signal	e = 1: 1,2A max e = 2: 0,6A max per output
Rated Input Current	1.3 A
Maximum working pressure	37 to 30000 psi (0.26 MPa to 206.8 MPa)
Temperature	temperature code T6, T110°C: -40°C…+60°C T120°C : -40°C…+70°C temperature code T5, T130°C: -40°C…+80°C

or

Rated Supply Voltage	30 Vdc
Output Signal	2: 1.2A max per Output
Rated Input Current	2.5 A
Maximum working pressure	37 to 30000 psi (0.26 MPa to 206.8 MPa)
Temperature	temperature code T110°C: -40°C…+60°C T120°C : -40°C…+70°C temperature code T4A, T130°C: -40°C…+80°C

- **Temperature Transducer – Standard** **ETS 45ab-c-d-eee-fff(gggh)**

a = mechanical connection	any alphanumeric character (not critical to certification)
b = electrical connection	9 or G or J (not approved for tb) or Q (not approved for Group A, db and tb) or W or U
c = signal	any alphabetic character
d = approval	D
e = probe length	numeric value in mm [max 500]
f = modification number	alphanumeric value
g = length of cable	numeric value
h = cable length definition	inch or " or cm or m

Technical data:

Rated Supply Voltage	30 Vdc
Output Signal	0..10 V, 4..20 mA
Rated Input Current	25 mA
Maximum working pressure	short probe sensor 8702 psi (60.0 MPa) long probe sensor 1813 psi (12.5 MPa)

DQD 507 Rev. 2019-04-30 Page 4

Certificate: 2032612 **Master Contract:** 224264
Project: 70194250 **Date Issued:** July 18, 2019

Temperature	temperature code T6, T110°C:	-40°C…+60°C
	T120°C :	-40°C…+70°C
	temperature code T5, T130°C:	-40°C…+80°C

- **Temperature Transducer – HART** **ETS 4abc-F21-kkk-f-hhh(iiij)** **Standard**
  ETS 4abc-F21-kkk-P-eeee(e)-fg-hhh(iiij) **with Press. Measurem.**

a = accuracy	1 or 5
b = mechanical connection	any alphanumeric character (not critical to certification)
c = electrical connection	9 or G or J (not approved for tb) or Q (not approved for Group A, db and tb) or W or U
F21	4..20 mA Signal (with HART Interface)
e = pressure range	4 digits for range in bar and 5 digits for range in psi
k = probe length	in mm [max 500]
f = approval	D
g = gauge type	any alphabetic character
h = modification number	alphanumeric value
i = length of cable	numeric value
j = cable length definition	inch or " or cm or m
P = Pressure measurement option	digital with HART Interface

Technical data:

Rated Supply Voltage	30 Vdc	
Output Signal	4..20 mA	
Rated Input Current	25 mA	
Maximum working pressure		
ETS 4abc-F21-kkk-f-hhh(iiij) short probe sensor		8702 psi (60.0 MPa)
ETS 4abc-F21-kkk-f-hhh(iiij) long probe sensor		1813 psi (12.5 MPa)
ETS 4abc-F21-kkk-P-eeeee-fg-hhh(iiij)		8702 psi (60.0 MPa)
Temperature	temperature code T6, T110°C:	-40°C…+60°C
	temperature code T5, T120°C:	-40°C…+70°C

- **Flow Rate Transmitter - HART** **HFT 31bc-F21-eeee-S-X-f-hhh(iiij)**

b = process connection	any alphanumeric character (not critical to certification)
c = electrical connection	9 or G or J (not approved for tb) or Q (not approved for Group A, db and tb) or W or U
F21	4..20 mA Signal (with HART Interface)
e = measuring range	4 digits for range l/min
S = housing material	Stainless Steel
X = housing version	
f = approval	D
h = modification number	alphanumeric value
i = length of cable	numeric value
j = cable length definition	inch or " or cm or m

Technical data:

Rated Supply Voltage	30 Vdc	
Output Signal	4..20 mA	
Rated Input Current	25 mA	
Maximum working pressure	6090 psi (42.0 MPa)	
Temperature	temperature code T6, T110°C:	-40°C…+60°C
	temperature code T5, T120°C:	-40°C…+70°C

DQD 507 Rev. 2019-04-30 Page 5

Certificate: 2032612 **Master Contract:** 224264
Project: 70194250 **Date Issued:** July 18, 2019

- **Bladder Integrity Sensor - HART** **BIS 1abc-F21-eeee(e)-fg-hhh(iiij)**

a = signal / bladder status	alphanumeric value (not critical for certification)
b = mechanical connection	2 = G1/2 DINA 3852 male
c = electrical connection	9 or G or J (not approved for tb) or Q (not approved for Group A, db and tb) or W or U
F21	4..20 mA Signal (with HART Interface)
e = measuring range	4 digits for range in bar and 5 digits for range in psi
f = approval	D or A
g = gauge type	any alphabetic character
h = modification number	alphanumeric value
i = length of cable	numeric value
j = cable length definition	inch or " or cm or m

Technical data:

Output Signal	4..20 mA output
Rated Supply Voltage	30 Vdc
Rated Input Current	25 mA
Maximum working pressure	10007.6 psi (69.0 MPa)
Temperature	temperature code T6, T110°C: -40°C…+60°C temperature code T5, T120°C: -40°C…+70°C

- **Difference Pressure Transmitter - Standard** **HPT 50c-d-eeee-S-f-hhh(psi)iiij**

c = electrical connection	9 or G or J (not approved for tb) or Q (not approved for Group A, db and tb) or W or U
d = signal	any alphabetic character
e = measuring range	numeric value
S = housing material	Stainless Steel
f = approval	D
h = modification number	alphanumeric value
(psi)	(psi) for psi-version or "" for bar-version
i = length of cable	numeric value
j = cable length definition	inch or " or cm or m
bar-version	iiij in brackets

Technical data:

Rated Supply Voltage	30 Vdc
Output Signal	0..10 V or 0..20 mA
or	
Rated Supply voltage	6 Vdc
Output Signal	10-90% ratiometric
Rated Input Current	25 mA
Maximum working pressure	6090 psi (42.0 MPa)
Temperature	temperature code T6, T110°C: -40°C…+60°C T120°C : -40°C…+70°C temperature code T5, T130°C: -40°C…+80°C

- **Difference Pressure Switch - Standard** **HPS 50c-pppp-ef-S-g-hhh(psi)iiij**

c = electrical connection	9 or G or J (not approved for tb) or Q (not approved for Group A, db and tb) or W or U
p = measuring range	numeric value
e = number of switching outputs	1 or 2
f = set point type	F= Fix or P= programmable
S = housing material	Stainless Steel

DQD 507 Rev. 2019-04-30 Page 6

Certificate: 2032612 **Master Contract:** 224264
Project: 70194250 **Date Issued:** July 18, 2019

g = approval	D
h = modification number	alphanumeric value
(psi)	(psi) for psi-version or "" for bar-version
i = length of cable	numeric value
j = cable length definition	inch or " or cm or m
bar-version	iiij in brackets

Technical data:

Rated Supply Voltage	30 Vdc	
Output Signal	e = 1: 1.2A max	
	e = 2: 0.6A max per output	
Rated Input Current	1.3 A	
Maximum working pressure	6090 psi (42.0 MPa)	
Temperature	temperature code T6, T110°C:	-40°C…+60°C
	T120°C :	-40°C…+70°C
	temperature code T5, T130°C:	-40°C…+80°C

Additional explanation to the type code of all models:

Electrical connection

9	=	1/2-14 NPT Conduit (male), Single leads
G	=	1/2-14 NPT Conduit (male), jacketed cable
J	=	Connection head, Aluminium
Q	=	Connection head, stainless Steel
W	=	M20x1.5 Conduit (male) [Draw.no: 4261296; long version], Single Leads
U	=	M20x1.5 Conduit (male) [Draw.no: 4261296; long version], jacketed cable
0	=	Special type of connection (not part of CSA Certification): M20x1.5 Conduit (male) [Drawing no.: 3654343; short version]

Mechanical connection

1	=	G1/2 B DIN EN 837, male
2	=	G1/2 DIN 3852, male
3	=	M14x1,5 DIN 3852, male
4	=	G1/4 A DIN 3852, male
5	=	7/16-20 UNF 2B (SAE4), female
6	=	7/16-20 UNF 2A (SAE4), male
7	=	9/16-18 UNF 2A (SAE6), male
8	=	1/4-18 NPT, male
9	=	G1/4 DIN 3852 female
A	=	9/16-18 UNF 2B (SAE6), female
B	=	F250C, Autoclave(9/16-18 UNF2B, female)
C	=	SF250CX20, Autoclave (7/16-20 UNF 2B female)
D	=	1/8-27 NPT male
E	=	M10x1 DIN 3852, male
F	=	1/4-18 NPT, female
G	=	G1/4 B DIN EN 837, male
H	=	3/4-16 UNF 2A (SAE8), male
J	=	G3/4 A DIN 3852 male
K	=	1/4-18 NPTF, male
L	=	1/4-18 NPTF, female
M	=	M12x1.5 DIN 3852 male
N	=	M20x1 without seal
P	=	AM12S38 DIN 3852 male

DQD 507 Rev. 2019-04-30 Page 7

Certificate: 2032612 **Master Contract:** 224264
Project: 70194250 **Date Issued:** July 18, 2019

R	=	M14x1.5 - ISO6149-2 male
S	=	M18x1.5 male
T	=	G1/8 DIN 3852, male
U	=	G3/8 DIN 3852, male
V	=	SF375CX20, Autoclave (9/16-18 UNF 2B female)
W	=	1/2-14 NPT male
Y	=	G1/2 HN 28-22 male
Z	=	flush mount process connection

I, O and Q are open for different common threads
Other threads as modification.

Standard signals

A	=	4…20mA	(2-wire)
B	=	max. range 0…10V	(3-wire)
C	=	4…20 mA	(3-wire , current source)
E	=	0…20mA	(3-wire , current source)
G	=	max. range 0…6V	(3-wire)
R	=	10%...90% Ub	(3-wire)
F21	=	4…20mA with HART Interface	

Conditions of Acceptability:

The products are required to be supplied only by certified power supply providing reinforced or double insulation for protection against electric shock with output voltages below the limits of 6.3.1 of 61010-1 or 30 V r.m.s. and 42.4 V peak or 60 V d.c and limited energy circuit according to 9.4 (LPS or Class2).

The equipment was not evaluated to flammable/explosive fluids or liquids.

Equipment is only to be installed by trained personal in accordance to the installation, set-up, operation and maintenance of comparable devices and certified as being capable of such work.

The equipment which is not direct installed to a junction box shall be connected to a conduit installation.

For BIS model: The BIS 1abc-F21-eeee(e)-fg-hhh(iiij) must not be energized when the bladder sensor is located in explosive atmosphere. The sensor can be located only in safe non-hazardous area. The bladder is not covered by this certification. The BIS model is certified as a component only and its final installation must be subjected to acceptance of local authority having jurisdiction.

Notes:
1. Basic model designation is followed by alpha/numeric suffixes denoting type code.
2. The devices must be grounded during installation.
3. The suitability of the grounding shall be subject to the acceptance of the Local Authority Having Jurisdiction.

Certificate: 2032612 **Master Contract:** 224264
Project: 70194250 **Date Issued:** July 18, 2019

APPLICABLE REQUIREMENTS

CAN/CSA Standard C22.2 No. 0-M91 *(Reaffirmed 2006)*	General Requirements - Canadian Electrical Code, Part II
CSA Standard C22.2 No. 25-1966 *(Reaffirmed 2000)*	Enclosures for Use in Class II Groups E, F, and G Hazardous Locations
CSA Standard C22.2 No. 30-M1986 *(Reaffirmed 2003)*	Explosion-Proof Enclosures for Use in Class I Hazardous Locations
CAN/CSA-C22.2 No. 60079-0:15	Explosive atmospheres — Part 0: Equipment — General requirements
CAN/CSA-C22.2 No. 60079-1:16	Explosive atmospheres — Part 1: Equipment protection by flameproof enclosures "d"
CAN/CSA-C22.2 No. 60079-31:15	Explosive atmospheres — Part 31: Equipment dust ignition protection by enclosure "t"
CSA Standard C22.2 No. 94.1-07 *(First Edition - September 2007)*	Enclosures for Electrical Equipment, Non-Environmental Considerations
CSA Standard C22.2 No. 94.2-07 *(First Edition - September 2007)*	Enclosures for Electrical Equipment, Environmental Considerations
CAN/CSA-C22.2 No. 61010-1-12	Safety Requirements for Electrical Equipment for Measurement, Control, and Laboratory Use, Part 1: General Requirements
ANSI/UL Standard 50 *(Twelfth Edition, September 2007)*	Enclosures for Electrical Equipment, Non-Environmental Considerations
ANSI/UL Standard 50E *(First Edition, September 2007)*	Enclosures for Electrical Equipment, Environmental Considerations
UL 61010-1 (Third Edition)	Safety Requirements for Electrical Equipment for Measurement, Control, and Laboratory Use - Part 1: General Requirements
ANSI/UL Standard 1203 *(Fourth Edition, September 2006)*	Explosion-Proof and Dust-Ignition-Proof Electrical Equipment for Use in Hazardous (Classified) Locations
UL 60079-0 Sixth Edition	Explosive atmospheres – Part 0: Equipment – General requirements
UL 60079-1 Seventh Edition	Explosive Atmospheres – Part 1: Equipment Protection by Flameproof Enclosures "d"
UL 60079-31 Second Edition	Explosive Atmospheres – Part 31: Equipment Dust Ignition Protection by Enclosure "t"

DQD 507 Rev. 2019-04-30 Page 9

Certificate: 2032612 **Master Contract:** 224264
Project: 70194250 **Date Issued:** July 18, 2019

MARKINGS

The manufacturer is required to apply the following markings:

- Products shall be marked with the markings specified by the particular product standard.
- Products certified for Canada shall have all Caution and Warning markings in both English and French.

Additional bilingual markings not covered by the product standard(s) may be required by the Authorities Having Jurisdiction. It is the responsibility of the manufacturer to provide and apply these additional markings, where applicable, in accordance with the requirements of those authorities.

The products listed are eligible to bear the CSA Mark shown with adjacent indicators 'C' and 'US' for Canada and US (indicating that products have been manufactured to the requirements of both Canadian and U.S. Standards) or with adjacent indicator 'US' for US only or without either indicator for Canada only.

The following markings are provided on thermally printed silver polyester adhesive nameplates that are manufactured by qMik Industrie-Kennzeichnungen, GmbH, Type qM 442. The nameplates are applied to the outside of the devices' stainless steel enclosures.

The Markings may alternatively be laser engraved onto the stainless steel enclosures.

All products

- Manufacturer name: "Hydac Electronic, GmbH", "Hydac Electronic", "Hydac" or equivalent or CSA Master Contract Number "224264", adjacent to the CSA Mark in lieu of manufacturer name (Note: May be omitted on small labels);
- Certificate Number CSA 19.2032612X;
- Model number: as specified in the PRODUCTS section, above;
- Electrical ratings: as specified in the PRODUCTS section, above;
- Ambient temperature rating: as specified in the PRODUCTS section, above;
- Manufacturing date in MMYY format, or serial number, traceable to month of manufacture;
- Enclosure type: "Type 4 Enclosure", "Type 4" or equivalent;
- The CSA Mark with or without "C" and "US" indicators, as shown on the Certificate of Conformity;
- Hazardous Location designation: as specified in the PRODUCTS section, above (may be abbreviated);
- Temperature code: as specified in the PRODUCTS section, above;
- Maximum Working Pressure (MWP): as specified in the PRODUCTS section, above;
- Wiring connections: denotes wiring function by wire color or numbers, as appropriate.

HDA-4000 and EDS-410 Approval E products:

- Reference to Installation Instructions: "Install per 663203".

HDA-4xxx and EDS-4xxx Approval D products with vents

- Reference to Installation Instructions: "Install per 663931"; or
- HDA4xxx: Reference to Operating Instructions (includes Control Drawing: 663931): "Protection concept → Operating Instruction 669835".
  EDS 4xxx: Reference to Operating Instructions (includes Control Drawing: 663931): "Protection concept → Operating Instruction 669837".

DQD 507 Rev. 2019-04-30 Page 10

Certificate: 2032612 **Master Contract:** 224264
Project: 70194250 **Date Issued:** July 18, 2019

ETS-45xx products:

- Reference to Installation Instructions: "Install per 663928"; or
- Reference to Operating Instructions (includes Control Drawing: 663928): "Protection concept → Operating Instruction 669836".

HDA4_ETS4_HFT3_F21/ HART models:

- Reference to Installation Instructions: "Install per 663929"; or
- HDA 4 : Reference to Operating Instructions (includes Control Drawing: 663929): "Protection concept → Operating Instruction 669905".
  ETS 4: Reference to Operating Instructions (includes Control Drawing: 663929): "Protection concept → Operating Instruction 669907".
  HFT 4: Reference to Operating Instructions (includes Control Drawing: 663929): "Protection concept → Operating Instruction 669908".

BIS F21 model:

- Reference to Installation Instructions: "Install per 663930"; or
- Reference to Operating Instructions (includes Control Drawing: 663930): "Protection concept → Operating Instruction 669906".

HPT_HPS model:

- Reference to Installation Instructions: "Install per 663932"; or
- Reference to Operating Instructions (includes Control Drawing: 663932): "Protection concept → Operating Instruction 669994".

DQD 507 Rev. 2019-04-30 Page 11

A4 Zertifikat IECEx / Certificate IECEx

IECEx Certificate of Conformity

INTERNATIONAL ELECTROTECHNICAL COMMISSION
IEC Certification System for Explosive Atmospheres
for rules and details of the IECEx Scheme visit www.iecex.com

Certificate No.:	**IECEx KEM 10.0053X**	Page 1 of 5	Certificate history:
Status:	**Current**	Issue No: 6	Issue 5 (2019-05-27) Issue 4 (2015-09-04) Issue 3 (2014-02-06) Issue 2 (2012-11-23) Issue 1 (2011-03-31) Issue 0 (2010-08-05)
Date of Issue:	2022-08-17		
Applicant:	**HYDAC Electronic GmbH** Hauptstraße 27 66128 Saarbrücken-Gersweiler **Germany**		
Equipment:	**Pressure Transducers, Pressure Switches, Temperature Transducers, Flow Rate Transmitters, Bladder Integrity Sensors and Connection heads**		
Optional accessory:			
Type of Protection:	**Ex db, Ex tb**		
Marking:	Ex db I Mb Ex db IIC T6...T4 Gb Ex tb IIIC T110 °C...T130 °C Db		

Approved for issue on behalf of the IECEx Certification Body:	**L.G. van Schie**
Position:	**Certification Manager**
Signature: (for printed version)	
Date: (for printed version)	2022-08-17

1. This certificate and schedule may only be reproduced in full.
2. This certificate is not transferable and remains the property of the issuing body.
3. The Status and authenticity of this certificate may be verified by visiting www.iecex.com or use of this QR Code.

Certificate issued by:

DEKRA Certification B.V.
Meander 1051
6825 MJ Arnhem
Netherlands

IECEx Certificate of Conformity

Certificate No.: **IECEx KEM 10.0053X** Page 2 of 5

Date of issue: 2022-08-17 Issue No: 6

Manufacturer: **HYDAC Electronic GmbH**
Hauptstraße 27
66128 Saarbrücken-Gersweiler
Germany

Manufacturing locations: **HYDAC Electronic GmbH**
Hauptstraße 27
66128 Saarbrücken-Gersweiler
Germany

This certificate is issued as verification that a sample(s), representative of production, was assessed and tested and found to comply with the IEC Standard list below and that the manufacturer's quality system, relating to the Ex products covered by this certificate, was assessed and found to comply with the IECEx Quality system requirements.This certificate is granted subject to the conditions as set out in IECEx Scheme Rules, IECEx 02 and Operational Documents as amended

STANDARDS :
The equipment and any acceptable variations to it specified in the schedule of this certificate and the identified documents, was found to comply with the following standards

IEC 60079-0:2017 Explosive atmospheres - Part 0: Equipment - General requirements
Edition:7.0

IEC 60079-1:2014-06 Explosive atmospheres - Part 1: Equipment protection by flameproof enclosures "d"
Edition:7.0

IEC 60079-31:2013 Explosive atmospheres - Part 31: Equipment dust ignition protection by enclosure "t"
Edition:2

This Certificate **does not** indicate compliance with safety and performance requirements other than those expressly included in the Standards listed above.

TEST & ASSESSMENT REPORTS:
A sample(s) of the equipment listed has successfully met the examination and test requirements as recorded in:

Test Report:

NL/KEM/ExTR10.0022/06

Quality Assessment Report:

DE/BVS/QAR06.0017/13

IECEx Certificate of Conformity

Certificate No.: **IECEx KEM 10.0053X** Page 3 of 5

Date of issue: 2022-08-17 Issue No: 6

EQUIPMENT:
Equipment and systems covered by this Certificate are as follows:

HDA 4xxx

Electronic Pressure Transducer with analogue output.
Depending on the applied pressure on the sensor cell a proportional output signal is generated.
One version has an additional temperature sensor.
It provides an analogue signal or analogue signal combined with a HART digital protocol.

EDS 4xxx
Electronic Pressure switch.
Depending on the applied pressure on the sensor cell a proportional internal signal is generated.
Depending on the factory set fixed value or programmable set point an electronic switch changes its status.

ETS 4xxx
Temperature Transducer.
Depending on the applied temperature on the sensor a proportional output signal is generated.
One version has an additional pressure sensor.
It provides an analogue signal or analogue signal combined with a HART digital protocol.

HFT 31xx
Flow Rate Transmitter.
An impellor driven by the speed of the flow of the liquid or gas through a turbine generates a signal pick up by a proximity switch, converted to a linear analogue current signal and is available via a HART interface.

BIS 1xxx
Bladder Integrity Sensor.
The bladder status signal is provided as a switching signal. Depending on the version, the temperature or pressure signal measured by the sensor is converted into a proportional analogue current signal and is available via a HART interface.

HPT 5xx
Electronic differential pressure transmitter with analogue output.
Depending on the applied differential pressure a piston with integrated magnet is shifted linearly. A Hall sensor is detecting the position and passes on the position to the evaluation electronics which calculates the output signal.

HPS 5xx
Same as HPT 5xx but with an output with an electronic switch.

Optional Connection Heads
Limatherm Type XD-AD and Pushna Type 1016 PSEM Ex d and Ex t certified enclosures.

SPECIFIC CONDITIONS OF USE: YES as shown below:
The ambient temperature range of the equipment is as indicated at 'Rated ambient temperature range' below.

When used in mining applications a conduit hose or pipe is to be installed at the ½-14 NPT or M20x1.5 electrical connection and the cable or leads are to run inside the conduit until an area is reached which is not contaminated with chemicals.

Electrostatic charging on non-metallic parts shall be avoided. See installation instructions for details.

IECEx Certificate of Conformity

Certificate No.: **IECEx KEM 10.0053X** Page 4 of 5

Date of issue: 2022-08-17 Issue No: 6

Equipment (continued):

Type Codes

Pressure Transducer
HDA4abc-d-eeee(e)-fg-hhh(psi)iiij
HDA 4aZc-d-eeee(e)-kkk-fg-hhh(psi)iiij
HDA 4abc-F21-eeee(e)-fg-hhh(iiij) Standard
HDA 4abc-F21-eeee(e)-T-III-fg-hhh(iiij) With temperature measurement
HDA 4aZc-F21-eeee(e)-kkk-fg-hhh(iiij) With front flush membrane

Pressure Switch
EDS 4abc-dddd(d)-ef-gh-iiii(psi)kkkl

Temperature Transducer
ETS 45ab-c-d-eee-fff-gggh
ETS 4abc-F21-kkk-f-hhh(iiij) Standard
ETS 4abc-F21-kkk-P-eeee(e)-fg-hhh(iiij) With pressure measurement

Flow Rate Transmitter
HFT 31bc-F21-eeee-S-X-f-hhh(iiij)

Bladder Integrity Sensor
BIS 1abc-F21-eeee(e)-fg-hhh(iiij)

Difference Pressure Transmitter
HPT 50c-d-eeee-S-f-hhh(psi)iiij
HPS 50c-pppp-ef-S-g-hhh(psi)iiij

Rated ambient temperature range
xxx-xxxx-F21-xxx
-40 °C to +60 °C for T6 and T110 °C
-40 °C to +70 °C for T5 and T120 °C

EDS with max. 2 x 1.2 A output signal
-40 °C to +80 °C for T4
-40 °C to +60 °C for T110°C
-40 °C to +70 °C for T120°C
-40 °C to +80 °C for T130°C

Other
-40 °C to +60 °C for T6 and T110 °C
-40 °C to +70 °C for T120 °C
-40 °C to +80 °C for T5 and T130 °C

For details of the variables refer to Annex 1.

IECEx Certificate of Conformity

Certificate No.:	**IECEx KEM 10.0053X**	Page 5 of 5
Date of issue:	2022-08-17	Issue No: 6

DETAILS OF CERTIFICATE CHANGES (for issues 1 and above)
Assessment per IEC 60079-0 : 2017 Ed. 7.0
Minor constructional changes

Annex:

226247500-ExTR10.0022.06 Annex1_1.pdf

A5 EU-Konformitätserklärung / EU declaration of conformity

HYDAC ELECTRONIC

HYDAC Electronic GmbH, Hauptstraße 27, 66128 Saarbrücken

HYDAC ELECTRONIC GMBH
Hauptstrasse 27
66128 Saarbrucken, Germany

Phone exchange: (0049) 6897 509-01
Fax purchasing dept.: (0049) 6897 509-1745
Fax sales dept.: (0049) 6897 509-1735
E-Mail: support.electronic@hydac.com
website: www.hydac.com
see also: General Terms of Use (AGB)

CE

EU-Konformitätserklärung / EU declaration of conformity 18 / 218a / 2023

Hiermit erklären wir in alleiniger Verantwortung, dass das nachfolgend bezeichnete Produkt auf Grund seiner Konzeption und Bauart, sowie in der von uns in Verkehr gebrachten Ausführung, den grundlegenden Sicherheits- und Gesundheitsanforderungen der unten aufgeführten Richtlinien/Verordnungen entspricht.

We herewith declare under our sole responsibility that, with regard to its design and construction and to the model brought onto the market by us, the product designated below conforms with the fundamental safety and health requirements of the directive/regulation listed below.

Bezeichnung / Designation	Temperaturmessumformer für explosionsgefährdete Umgebungen (Druckfeste Kapselung) / Temperature transmitter for Hazardous Environments (Flameproof Enclosure)
Typ / Type	ETS 4xxx ... Dx ...
EMV Richtlinie / EMV Guideline	2014/30/EU
Normen / Standards	EN 61000-6-1:2007 EN 61000-6-2:2005 EN 61000-6-3:2012 EN 61000-6-4:2011
Baumusterprüfbescheinigung / Type Examination Certificate	KEMA 10ATEX0100X
	DEKRA Certification B.V.

HYDAC ELECTRONIC

ATEX	2014/34/EU
I M2 Ex db I Mb	EN IEC 60079-0:2018
II 2G Ex db IIC T6,T5 Gb	EN 60079-1:2014
II 2D Ex tb IIIC T110°C...T130°C Db	EN 60079-31:2014

27th February 2023	ppa C. Krupp	
Datum / Date	Name	(CB authorized person)

A6 UKCA-Konformitätserklärung / UKCA declaration of conformity

HYDAC ELECTRONIC

HYDAC Electronic GmbH, Hauptstraße 27, 66128 Saarbrücken

HYDAC ELECTRONIC GMBH
Hauptstrasse 27
66128 Saarbrücken, Germany

Phone exchange: (0049) 6897 509-01
Fax purchasing dept.: (0049) 6897 509-1745
Fax sales dept.: (0049) 06897 509-1735
E-Mail: support.electronic@hydac.com
website: www.hydac.com
see also: General Terms of Use (AGB)

Authorised to compile the technical documentation:
HYDAC TECHNOLOGY LIMITED
De Havilland Way, Windrush Park
WITNEY, Oxfordshire, GB-OX29 0YG
Phone exchange: (0044) 1993 / 86 63 66
Fax: (0044) 1993 / 86 63 65
E-Mail: info@hydac.co.uk
website: www.hydac.com

UK CA

UKCA – Declaration of Conformity

18 / 17a / 2023

We herewith declare under our sole responsibility that, with regard to its design and construction and to the model brought onto the market by us, the product designated below conforms with the fundamental safety and health requirements of the standards listed below.

Designation	Temperature transmitter for Hazardous Environments (Flameproof Enclosure)
Type	ETS 4xxx ... Dx ...
EMV Richtlinie / EMV Guideline	2014/30/EU
Designated Standards	EN 61000-6-1:2007 EN 61000-6-2:2005 EN 61000-6-3:2012 EN 61000-6-4:2011
Type Examination Certificate	KEMA 10ATEX0100X DEKRA Certification B.V.

HYDAC ELECTRONIC

ATEX		2014/34/EU
I M2	Ex db I Mb	EN IEC 60079-0:2018
II 2G	Ex db IIC T6,T5 Gb	EN 60079-1:2014
II 2D	Ex tb IIIC T110°C...T130°C Db	EN 60079-31:2014

27th February 2023	ppa C. Krupp	
Datum / Date	Name	(CB authorized person)

Geschäftsführer:
Dr. Franz Josef Sickle, Mathias Dieter,
Dr. Carlos Javier Moran Iglesias

SitZ der Gesellschaft: Saarbrücken
Registergericht:
Saarbrücken, HRB 8707

USt-Identnummer: DE 138 277 439
Steuernummer: 040/7105/0084

Bankverbindung in Saarbrücken:

Commerzbank AG
Nr. 3188000 BLZ 590 800 80
BIC DRESDEFF590
IBAN DE77 5008 0000 0318 8800 00

Deutsche Bank AG
Nr. 0355800, BLZ 590 700 00
BIC DEUTDESMMSB
IBAN DE94 5007 0000 0035 5800 00

Landesbank Saar
Nr. 3050000 BLZ 590 500 00
BIC SALADE55XXX
IBAN DE91 5005 0000 3005 2500 00

Hypovereinsbank
Nr. 3036800, BLZ 590 200 80
BIC HYVEDEMM433
IBAN DE98 5002 0080 0303 5680 04

Deutsche PostBank
Nr. 203800, BLZ 590 100 66
BIC PBNKDEFF590
IBAN DE87 5001 0066 0200 2006 66

HYDAC ELECTRONIC GMBH
Hauptstrasse 27
D-66128 Saarbruecken
Germany

Web: www.hydac.com
E-Mail: electronic@hydac.com
Tel.: +49 (0)6897 509-01
Fax: +49 (0)6897 509-1726

HYDAC SERVICE
For enquiries regarding repairs, please contact HYDAC Service.

HYDAC SERVICE GMBH
Hauptstr. 27
D-66128 Saarbruecken
Germany

Tel.: +49 (0)6897-509-1936
Fax: +49 (0)6897-509-1933

Notice

The information and particulars provided in this manual apply to the operating conditions and applications described herein. In the event of deviating applications and/or operating conditions, please contact the respective HYDAC department concerned.

If you have any questions, suggestions, or encounter any problems of a technical nature, please contact your HYDAC representative.

All technical details are subject to change without notice.